INTEX® OWNER'S MANUAL INFLATABLE BOAT

IMPORTANT

THIS BOOKLET CONTAINS IMPORTANT SAFETY INFORMATION. READ IT THOROUGHLY BEFORE USING THIS PRODUCT AND KEEP IT FOR FUTURE REFERENCE.

ISO-6185 BOAT DESIGN CATEGORY D

Due to a policy of continuous product improvement, Intex reserves the right to change specifications and appearance, which may result in updates to the instruction manual without notice.

©2025 Intex Marketing Ltd. - Intex Development Co. Ltd. - Intex Recreation Corp. All rights reserved/Tous droits réservés/Todos los derechos reservados/Alle Rechte vorbehalten. Printed in China/Imprimé en Chine/Impreso en China/Gedruckt in China.
®™ Trademarks used in some countries of the world under license from/®™ Marques utilisées dans certains pays sous licence de/Marcas registradas utilizadas en algunos países del mundo bajo licencia de/Warenzeichen verwendet in einigen Ländern der Welt in Lizenz von/ **Intex Marketing Ltd. to/à/a/an Intex Development Co. Ltd., Hong Kong & Intex Recreation Corp., P.O. Box 1440, Long Beach, CA 90801** • Distributed in the European Union by/Distribué dans l'Union Européenne par/Distribuido en la unión Europea por/Vertrieb in der Europäischen Union durch/**Intex Trading B.V., Ettenseweg 46, 4706 PB Roosendaal – The Netherlands** • Distributed in the UK by **Unitex Service (UK) Limited, 124 City Road, London, England, EC1V 2NX, UK.**
www.intexcorp.com

INTEX®

098-*A*-R0-2606

TABLE OF CONTENTS

INTRODUCTION....3

MANUFACTURER'S CERTIFICATION....3

SAFETY & WARNING....3

MANUFACTURER'S RECOMMENDATION....4

DESCRIPTION....5-7

INFLATING INSTRUCTIONS....8

HOW TO USE BOSTON VALVE....8

FISHING ROD HOLDER USE....9

OAR ASSEMBLY....9-10

GRAB LINE INSTALLATION....11

ACCESSORY LINE INSTALLATION....11

SAFETY AND OPERATION INSTRUCTIONS....11-12

CARE AND MAINTENANCE....12

DISASSEMBLY AND STORAGE....13

TROUBLESHOOTING....13

REPAIRS....13

LIMITED WARRANTY....14

SAVE THESE INSTRUCTIONS

98
A

Introduction

This manual has been compiled to help you to operate your craft with safety and pleasure. It contains details of the craft, the equipment supplied or fitted, its systems, and information on its operation and maintenance. Please read it carefully, and familiarize yourself with the craft before using it.

If this is your first craft, or you are changing to a type of craft you are not familiar with, for your own comfort and safety, please ensure that you obtain handling and operating experience before assuming command of the craft. Your dealer or national sailing federation or yacht club will be pleased to advise you of local sea school, or competent instructors.

PLEASE KEEP THIS MANUAL IN A SECURE PLACE, AND HAND IT OVER TO THE NEW OWNER WHEN YOU SELL THE CRAFT. RECORD THE "WATERCRAFT IDENTIFICATION NUMBER" (WIN) WHICH IS PRINTED ON THE BOAT'S HULL IN THE FOLLOWING BOX:

WIN: _____

Manufacturer's Certification

For boats between and including 2.5 and 24 meters hull length, a **CE** (FOR EUROPE ONLY) mark means that the boat complies with European Directives for Recreational Craft 2013/53/EU as published by the International Organization for Standardization, ISO 6185.

NMMA (FOR USA ONLY) certification means that the boat, sold in the United States, has been judged by the National Marine Manufacture's Association to be in compliance with the U.S. Coast Guard Regulations and American Boat and Yacht Council (ABYC) standards and recommended practices.

Safety

Boat Design Category D -"SHELTERED WATERS"-: Designed for voyages on sheltered coastal waters, small bays, small lakes, rivers and canals when conditions up to, and including, wind force 4 and significant wave heights up to, and including, 0.3 m may be experienced, with occasional waves of 0.5 m maximum height, for example from passing vessels.

⚠ WARNING

- This is not a life saving device. Use only under competent supervision. Never allow diving into this product. Never leave in or near the water when not in use. **Never tow from any vehicle.**
- Read the complete Owner's Manual before use and store this Manual in a safe place for future reference.
- Follow all the Safety and Operating Instructions on this Manual.
- TYPE II, inflatable boats capable of taking an outboard motor. Motors are not to exceed the maximum recommended power and weight.
- Rotating propeller may cause serious injury or death. Shut off engine when near persons in the water.
- Read the instruction of outboard motor for correct installation and operation.
- **Beware of offshore winds and currents.** Never navigate alone.
- Do not exceed the maximum recommended capacities. Overloading violates regulations.
- Everyone on board must wear a Personal Floatation Device (PFD).
- Use caution when stepping or climbing aboard the boat. Step into the center of the boat for maximum stability.
- Distribute the weight of passengers, gear, tackle box, and accessories so that the boat sits level fore (front) to aft (back) and side-to-side.
- Do not use your boat if you suspect a puncture or leak.
- Adults should inflate the chambers in numbered sequence.
- Not for white water rafting or any other extreme sports activities.
- Not for commercial or rental use.
- Follow these rules to avoid drowning, paralysis or other serious injuries.

SAVE THESE INSTRUCTIONS

98
A

Manufacturer's Recommendation

The total number of persons, motor power and total weight shall not exceed the limits printed on the boat. Please refer to the boat's hull label for the actual values of your boat. See Table A.

TABLE A

MODEL	TYPE	L_h	B_h		+ +		⇨ ● ⇦	Unladen Craft Weight
		m	m	HP	kg		bar (psi)	kg
CHALLENGER 3 / SET	II	2.95	1.37	1.5	320	3	0.035 (0.5)	9
SEAHAWK 2 / SET	II	2.36	1.14	1.5	240	2	0.069 (1.00)	6
SEAHAWK 3 / SET	II	2.95	1.37	1.5	360	3	0.069 (1.00)	11
SEAHAWK 4 / SET	II	3.51	1.45	1.5	480	4	0.069 (1.00)	17
EXCURSION 4 / SET	II	3.15	1.65	1.5	500	4	0.069 (1.00)	19
EXCURSION 5 / SET	II	3.66	1.68	1.5	600	5	0.069 (1.00)	22
MARINER 3 / SET	II	2.97	1.27	2	400	3	0.080 (1.14)	25
MARINER 4 / SET	II	3.28	1.45	3	500	4	0.080 (1.14)	32

BOAT LABEL FORMAT

① **ISO 6185 PART 1 TYPE_____**

CATEGORY D

Do not overinflate or use high pressure air compressor to inflate. Adults should inflate the chambers with cold air in numbered sequence.
Use the enclosed ruler to check while inflating.

Nicht zu stark aufblasen und keinen Kompressor zum Aufblasen verwenden.
Erwachsene sollten die kammern in der angegebenen Reihenfolge mit kalter luft aufblasen.
Verwenden Sie das beigefügte Lineal um die korrekte Füllung zu überprüfen.

Ne pas surgonfler. Ne pas utiliser de compresseur pour le goflage. Le gonflage doit être effectué par un adulte avec de l'air froid en suivant les étapes suivantes.
Utiliser la règle jointe pour ajuster le gonglage de la chambre à air principale.

② CE **BY INTEX®**

MAXIMUM CAPACITIES
MAXIMUM-KAPAZITÄT
CAPACITÉS MAXIMUM + + = ___ Kg (___ Lbs) ③

MAXIMUM POWER
MAXIMUM MOTORKRAFT
PUISSANCE MAXIMUM ___kW (___H.P.) / ___Kg (___Lbs) ④

PERSONS
PERSONEN
PERSONNES = ___ ⑤

MANUFACTURER
HERSTELLER
FABRICANT **INTEX®** CHINA ⑥

MODEL
MODELL
MODÈLE _____ ⑦

RECOMMENDED WORKING PRESSURE FOR EACH CHAMBER
EMPFOHLENE ARBEITSDRUCK FÜR JEDE LUFTKAMMER
RECOMMANDÉ FONCTIONNEL PRESSION POUR CHAQUE CHAMBRE À AIR ⑧
⇨ ● ⇦ = ___ bar (___ psi)

MAXIMUM CAPACITIES / CAPACITÉS MAXIMALES

PERSONS OR ____kg (___Lbs) / PERSONNES OU ___KG
____ POUNDS, PERSONS, GEAR / ___KG, PERSONNES ET ÉQUIPEMENT

DESIGN COMPLIANCE WITH NMMA REQUIREMENTS BELOW IS VERIFIED. MFGR. RESPONSIBLE FOR PRODUCTION CONTROL.
LA CONFORMITÉ DU DESIGN AVEC LES EXIGENCES NMMA EST VÉRIFIÉE. MFGR. RESPONSABLE DU CONTRÔLE PRODUCTION.

LOAD CAPACITY (BASIC FLOTATION)
CAPACITÉ DE CHARGE (FLOTTAISON DE BASE) ___Kg (___ Lbs) MAX.
Certified by the National Marine Manufacturers Association using ABYC standards
Certifié par la National Marine Manufacturers Association en utilisant les normes ABYC ⑨

CN- XEE _ _ _ _ _ _ _ _ _ _ ⑩

① ISO-6185 boat design category (certain models).
② CE mark (for Europe only) (certain models).
③ Manufacturer's recommended maximum load capacity.
④ Maximum motor power and motor weight.
⑤ Maximum person's capacity.
⑥ Manufacturer's name and country of origin.
⑦ Model name and number.
⑧ Manufacturer's recommended working pressure.
⑨ NMMA (for USA only) certification means that the boat, sold in the United States, has been judged by the National Marine Manufacture's Association to be in compliance with the U.S. Coast Guard Regulations and American Boat and Yacht Council (ABYC) standards and recommended practices.
⑩ Watercraft identification number (WIN).

SAVE THESE INSTRUCTIONS

Description
Challenger Series

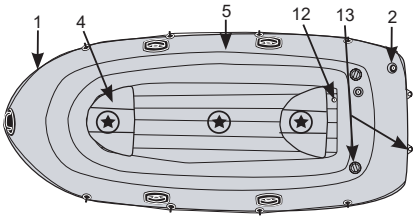

Challenger 3 / Set

" ★ " - Recommended seating arrangement of the occupants.

Seahawk Series

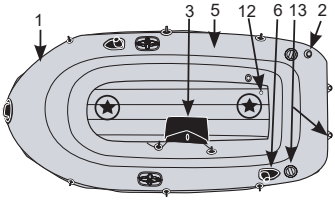

Seahawk 2 / Set

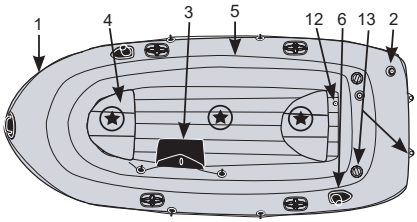

Seahawk 3 / Set

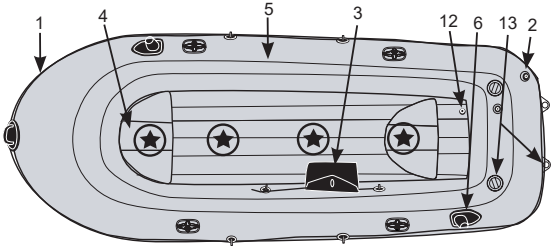

Seahawk 4 / Set

" ★ " - Recommended seating arrangement of the occupants.

REF. NO.	DESCRIPTION	QTY	SPARE PART NO.			
			Challenger 3	Seahawk 2	Seahawk 3	Seahawk 4
1	ALL AROUND GRAB LINE	1	11055	11055	11055	11055
2	BOSTON VALVE	2	10033	10033	10033	10033
3	GEAR POUCH	1	/	10159	10159	10159
4	SEAT CUSHION	2	11056A	/	11057A	11057A
5	BOAT BODY	1	12681	12897	12898	12899
6	FISHING ROD HOLDER END CAP	2	/	10158	10158	10158
7*	OAR BLACK RETAINER RING FOR 59623	2	10035	10035	10035	10035
8*	OAR CONNECTOR	2	/	10036	/	/
9*	WHITE COVER FOR 59623	4	/	10046	/	/
10*	BLADE FOR 59623	2	/	10176	/	/
11*	ALUMINUM OAR SET	2	12404	/	10063	10063
12	INFLATION VALVE	/	/	/	/	/
13	MOTOR MOUNT	/	/	/	/	/

*** Not shown**

SAVE THESE INSTRUCTIONS

Excursion Series

98
A

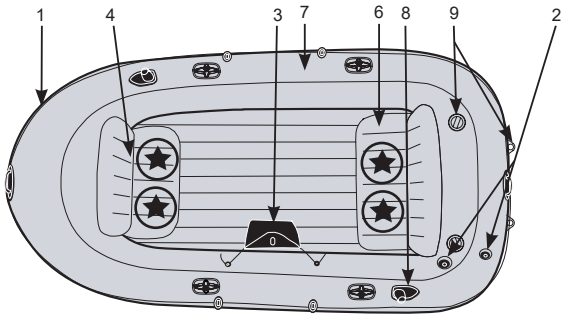

Excursion 4 / Set

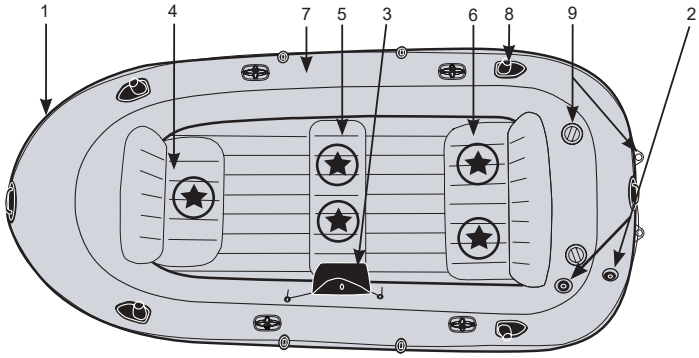

Excursion 5 / Set

" ★ " - Recommended seating arrangement of the occupants.

REF. NO.	DESCRIPTION	QTY	SPARE PART NO.	
			Excursion 4	Excursion 5
1	ALL AROUND GRAB LINE	1	11055	11055
2	BOSTON VALVE	2	10033	10033
3	GEAR POUCH	1	10159	10159
4	FRONT SEAT CUSHION	1	11059A	11059A
5	MIDDLE SEAT CUSHION	1	/	11061A
6	BACK SEAT CUSHION	1	11060A	11060A
7	BOAT BODY	1	12900	12896
8	FISHING ROD HOLDER END CAP	2	10158	/
		4	/	10158
9	MOTOR MOUNT	/	/	/
10*	OAR BLACK RETAINER RING	2	10035	10035
11*	ALUMINUM OAR SET	2	10063	10063

*** Not shown**

SAVE THESE INSTRUCTIONS

98
A

Mariner 3 / Set

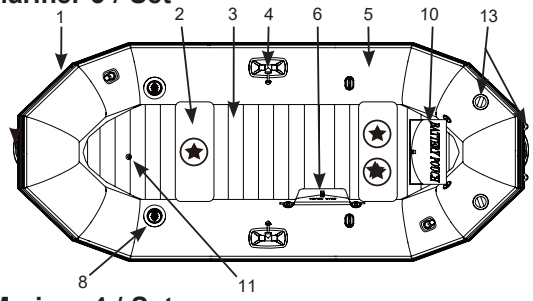

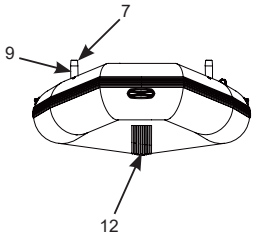

Mariner 4 / Set

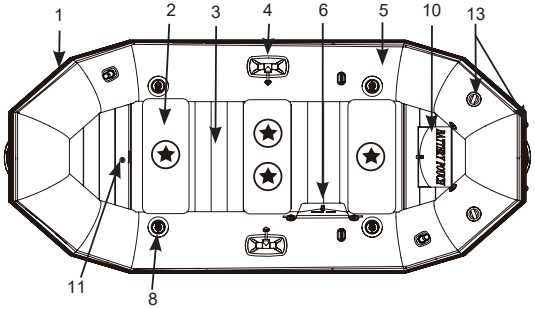

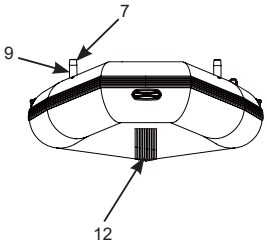

" ★ " - Recommended seating arrangement of the occupants.

REF. NO.	DESCRIPTION	QTY	SPARE PART NO.	
			Mariner 3	Mariner 4
1	ALL AROUND GRAB LINE	1	11055	11647
2	SEAT CUSHION	2	11758G	/
		3	/	10642G
3	REMOVABLE SLATS FLOOR	1	11862G	11863G
4	ROTATIONAL OAR LOCK	2	/	/
5	BOAT BODY	1	10082	10081
6	GEAR POUCH	1	10159	10159
7	END CAP (PREINSTALLED IN #13013G)	2	13014G	13014G
8	BOSTON VALVE	2	10033G	/
		4	/	10033G
9	FISHING ROD HOLDER	2	13013G	13013G
10	BATTERY POUCH	1	10160	10160
11	KEEL VALVE	/	/	/
12	INFLATABLE KEEL	/	/	/
13	MOTOR MOUNT	/	/	/
14*	ALUMINUM OAR SET	2	10062	10062

*** Not shown**

NOTE: Only use Intex Motor Mount Kit (#68624).
Drawings for illustration purpose only. Actual product may vary. Not to scale.

SAVE THESE INSTRUCTIONS

98
A

Inflating Instructions

Before starting, locate a clean area free of stones or other sharp objects. Unroll the boat so it is laid out flat, and locate your pump.

Use a hand or foot operated air pump to inflate the boat. Do not use high-pressure air compressors. Adults should inflate the chambers following the numerical sequence marked on the valves. It is very important to follow the numerical sequence; failure to do so will result in an improperly inflated boat. Fill each chamber until it is stiff to the touch but NOT hard. Use the enclosed ruler to check the main chamber for proper inflation. DO NOT OVER INFLATE. Fill with cold air only.

IMPORTANT: Air temperature and weather condition do affect the internal air pressure of inflatable products. In cold weather the product will lose some pressure due to the fact that the air will contract. If this occurs, you may want to add a little air to the product. However, in hot weather, the air will expand. You must let some air out to prevent the product from failing due to overpressure.

How to Use Boston Valve:

1. Double valve cap (valve lets air in, not out).
2. Quick deflation cap.
3. Unscrew Double valve cap.
4. Insert output end of air pump into valve and fill. Do not over inflate or use high pressure compressor.
5. To deflate: unscrew quick-deflation cap. **CAUTION:** Double valve does not operate when this cap is off. Do not unscrew this cap while boat or inflatable is in water.

Challenger series / Seahawk series / Excursion series:

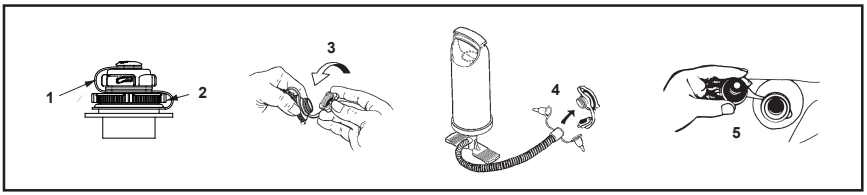

Mariner :

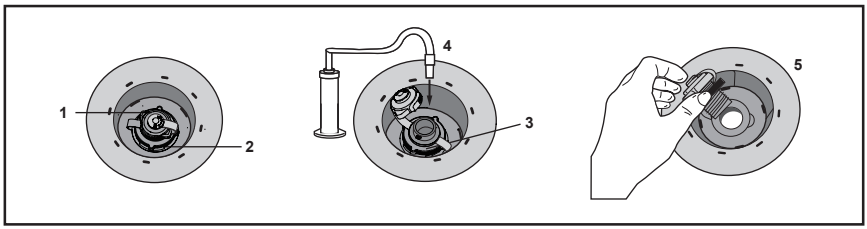

SAVE THESE INSTRUCTIONS

98
A

Seat Installation (Certain Models):

1. Inflate each seat cushion slowly to about 75% of its capacity.
2. Attach the seat cushion hinge to the hinge on the boat. Repeat the connection on the other side and for all seats. See Fig A.
3. Finish inflating the seat cushions slowly until it is firm to the touch but NOT hard. DO NOT OVER INFLATE!
4. To disassemble the seats, deflate the seats first and reverse the installation procedures.
   NOTE: Some seat cushions after inflation are tuck in directly into the fore, mid or aft locations of the boat cockpit. No hinges.

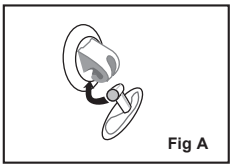
Fig A

Mariner:

1. Inflate each seat cushion slowly to about 75% of its capacity.
2. Put the seat cushions into the fore, mid or aft locations of the boat cockpit.
3. Finish inflating the seat cushions slowly until it is firm to the touch but NOT hard. DO NOT OVER INFLATE!
4. Seat cushions after inflation are tuck in directly into the fore, mid or aft locations of the boat cockpit.
5. To disassemble the seats, deflate the seats first and reverse the installation procedures.

Fishing Rod Holder Use (Certain Models):

1. Slide the end cap over the end of the fishing rod.
2. Insert the fishing pole into the holder.

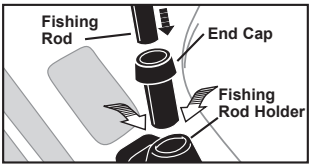

Mariner series:

1. Slide the fishing rod holder into the mounting base.
2. Insert the end cap into the fishing rod holder.
3. Insert the fishing rod into the end cap.

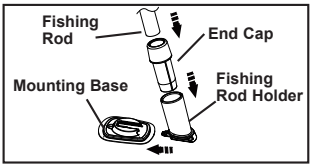

Oar Assembly:

1. Insert "Shaft A" with the pin end first into the blade. Make sure the pin is securely fastened to the blade.
2. Insert the assembled "Shaft A" through the oar-lock with the blade towards outboard (water).
3. Place the retainer ring onto the other end of "Shaft B", from inside of the boat.
4. Press the pin and insert shaft B into shaft A, make sure the pin is securely snapped into the hole.
5. When the oars are not in use secure the oars onto the oar holders located on each side of the boat.

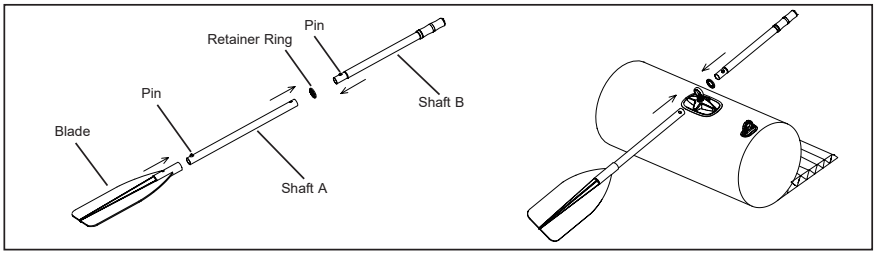

SAVE THESE INSTRUCTIONS

For MARINER 3 & 4:

98
A

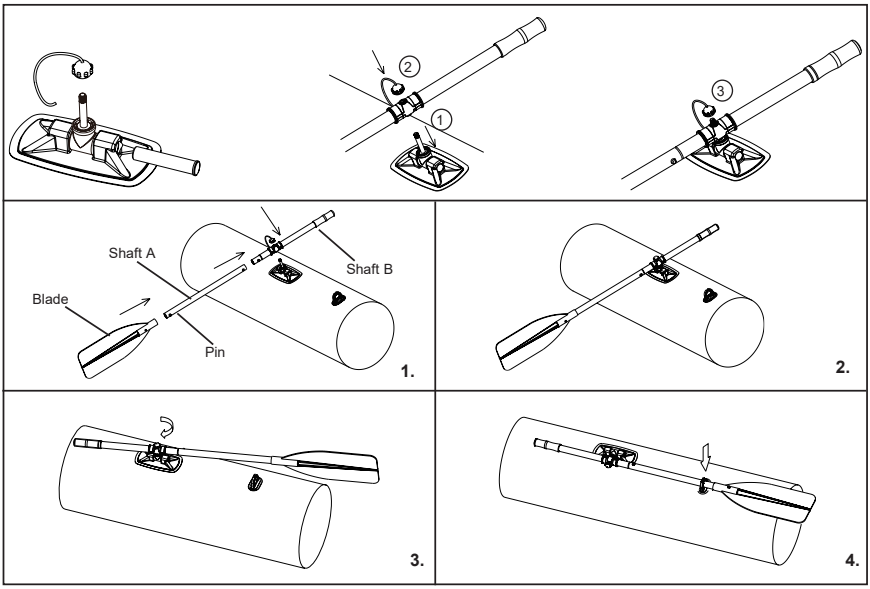

FRENCH OARS:

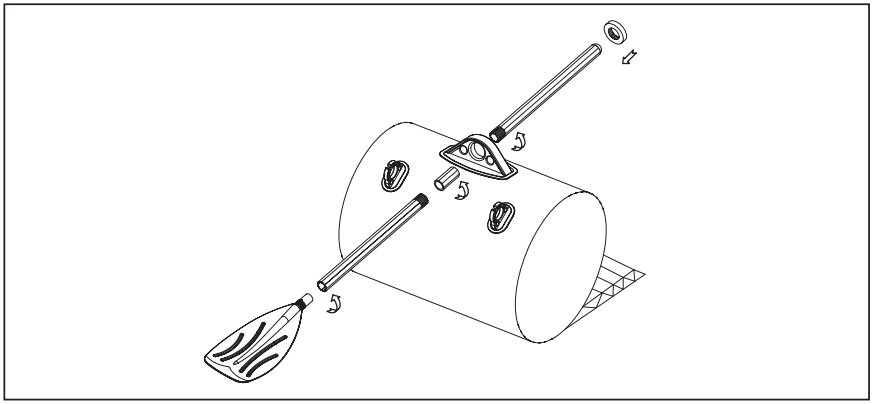

SAVE THESE INSTRUCTIONS

98
A

Grab Line Installation (Certain Models):

IMPORTANT: To properly install the inflatable boat's grab line and/or accessory lines, first inflate the boat. If is necessary, begin the grab line installation at the rear of the boat by threading it through the rope holders completely around the outside of the boat. Tie the two loose ends in a square knot at the rear end of the boat.

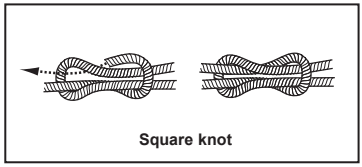

Accessory Line Installation (Certain Models):

Your boat may have accessory lines to install. Tie a figure eight knot into one end of the accessory line and slide it through the rope holders. Tie a figure eight knot in the remaining end of the rope.
The accessory bags may or may not be attached to the accessory lines. Slide the rope through the accessory bags while installing the accessory lines, if desired.

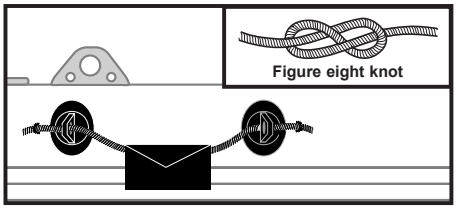

Safety and Operating Instructions

Before Departing from the Shore or Dock

Know all required information and inform your passengers:

- Take a boating safety course and get hands-on training from your boat dealer or local boating authorities.
- Know all local regulations and hazards related to water activities and boat operation.
- Check weather forecast, local currents, tides and wind conditions.
- Advise someone on land of the time you plan to be back at your starting point.
- Explain basic boat operation to all passengers.
- Children and non-swimmers need special instructions in the use of life jacket or personal floatation devices (PFD).
- Be sure that one of your passengers can operate the boat in case of emergency.
- Learn how to determine the distance you can cover, and remember that bad weather conditions can alter this.
- Review all safety requirements regularly.

Check the working condition of the boat and equipments:

- Check inflation pressure.
- Inspect the valves caps.
- Check the load is evenly distributed, fore (front) to aft (back) and side-to-side.

Make sure that all required safety equipment is on board (check the laws and regulations of the country or locality in which you are boating to see if additional equipment may be needed):

- One personal flotation device (PFD) per person.
- Air pump, oars, repair kit and tool kit.
- Any other mandatory equipment.
- The boat papers and your boating license (if applicable).
- Lights are required if operating after dark.

SAVE THESE INSTRUCTIONS

Rules to Observe During Navigation

- Be responsible, do not neglect the safety rules, this could jeopardize your life and the lives of others.
- Always keep control of your boat.
- Respect local regulations and practices.
- Near the shore, navigate in the designated boating area.
- Remember that weather conditions can rapidly deteriorate. Always be sure that you can reach a shelter rapidly.
- Everyone on board must always wear a personal flotation device (PFD).
- Do not drink alcohol or take drugs before or while operating your boat. Maintain passenger sobriety.
- Do not exceed the authorized number of persons or weight.
- Make sure your passengers remain seated at all times. At planning speeds, in rough water or during sharp turns, all passengers should position themselves in seats or on the floor.
- No bow riding. Bow riding is illegal in most areas and is extremely dangerous. In case of falling, the man overboard is in the way of the propeller.
- Be especially careful when docking. Arms and legs may be injured if they are outside the boat.
- Keep clear of swimmers and divers. Always avoid areas where divers/swimmers are in the water.
- Keep a sharp lookout especially when operating near beaches and launch sites. The Alpha flag indicates proximity of divers. You MUST maintain a safe distance as required by your local boating laws, which may range from 50 meters (164 feet) to 91 meters (300 feet).
- Avoid sharp turns at high speeds. You could get ejected from the boat.
- Do not make changes in direction without advising passengers.
- Avoid all contact between the buoyancy tubes and sharp objects or aggressive liquids (such as acid).
- Do not smoke on board. Most importantly while filling the fuel tank.
- Any fuel spilled must be cleaned and disposed of according to local laws and regulations.

Reboarding your boat

All around grab line is provided to assist with reboarding the boat. Grabbing the line and pulling yourself inside the cockpit is easiest to perform over the port and starboard (left and right) sides of the boat. Pay attention to all safety information and warnings on your boat and never approach the boat from the stern (back side) when a motor is installed.

Care and Maintenance

The boat is made of the highest quality materials and complies with ISO 6185 standards. Altering the construction of the boat will endanger your own safety, safety of the occupants and void the limited warranty!

There is very little that you have to do to keep your boat in good condition for many years. You may store it inflated or deflated. If you leave it outside, raise it up off the ground and do not place any heavy or sharp objects on it. If it is going to be in direct sunlight or exposed to leaves or rain, cover it with a tarp. We do not recommend hanging the boat. If you store it in a closet, basement or garage, we suggest you pick a cool, dry place, making sure the boat is clean and dry before you store it - or mold can accumulate.

Use as few cleaning agents as possible, do not discharge waste agents into water, and clean your boat preferably on land.

Clean your boat after a trip to prevent damage from sand, salt water or sun exposure.

Most dirt can be removed with a garden hose, a sponge and mild soap. Make sure the boat is completely dry before storing. Store the product and accessories in a dry, temperature controlled, between 32 degrees Fahrenheit (0 degrees Celsius) and 104 degrees Fahrenheit (40 degrees Celsius) storage location.

SAVE THESE INSTRUCTIONS

98
A

Disassembly and Storage

First clean your boat thoroughly following the Care and Maintenance instructions. Open all air valves and deflate boat completely. Remove all the accessories from the boat; seats, fishing rod holders, oars, gear pouch and battery pouch.

Fold the left and right chambers of the boat towards the middle of the floor. It is not necessary to remove the slats to fold the boat. Fold the bow end twice to the middle of the boat tightly while forcing out any remaining air; repeat this procedure for the stern. With two opposing folded sides, fold one end over the other like closing a book. Replace all inflation valve caps. Your boat is ready for storage. Fold the boat loosely and avoid sharp bends, corners and creases which can damage the boat.

Troubleshooting

If your boat appears a bit soft, it might not be because of a leak. If the boat was inflated late in the day with 32°C (90°F) air, that air might cool down to 25°C (77°F) overnight. The cooler air exerts less pressure on the hull, so it could appear soft the next morning.

If there has been no temperature variation, you need to start looking for a leak:

- Take a good look at your boat from just a few feet away. Flip it over and closely check over the outside. Any large leaks should be clearly visible.
- If you have an idea where your leak is, use a mix of dishwashing liquid and water in a spray bottle, and spray over the suspicious areas. Any leak will produce bubbles that will pinpoint the location of the leak.
- Check valves for leak, if necessary, spray soapy water around the valve and the valve base.

Repairs

Through constant use you may occasionally puncture your boat. Most leaks only take a few minutes to repair. Your boat comes with a repair patch, and additional repair supplies can be ordered from Intex Consumer Service or from our website.

First locate the leak; soapy water will bubble out from the source of the leak. Thoroughly clean the area surrounding the leak to remove any dirt or grime.

Cut a piece of repair patch large enough to overlap the damaged area by approximately 1.5 cm (1/2”). Round off the edges, and place the patch on the damaged area and press down firmly. You may want to use a weight on top to keep it in place.

Do not inflate in 30 minutes after patching.

If the patch does not hold, you can purchase a PVC or silicon based glue for repairing camping mats, tents or shoes from your local market to patch your boat, please refer to the instruction of the glue for patching.

SAVE THESE INSTRUCTIONS

Limited Warranty
Intex Inflatable Boat

Your Intex Inflatable Boat has been manufactured using the highest quality materials and workmanship. All Intex Inflatable Boats have been inspected and found free of defects prior to leaving the factory. This limited warranty applies to the Intex Inflatable Boat only.

This limited warranty is in addition to, and not a substitute for, your legal rights and remedies. To the extent that this warranty is inconsistent with any of your legal rights, they take priority. For example, consumer laws across the European Union provide statutory warranty rights in addition to the coverage you receive from this limited warranty: for information on EU-wide consumer laws, please visit the European Consumer Center website at http://ec.europa.eu/consumers/ecc/contact_en/htm.

The provisions of this limited warranty apply only to the original purchaser. This Limited Warranty is valid for a period of 1 year from the latter of the date of purchase or delivery. Keep your purchase information with this document, as proof of purchase will be required and must accompany warranty claims or the limited warranty will be invalid.

If you find a manufacturing defect in the Intex Inflatable Boat during the warranty period, please contact the appropriate Intex Service Center listed in the separate "Authorized Service Centers" sheet. If the item is returned as directed by the Intex Service Center, the Service Center will inspect the item and determine the validity of the claim. If the item is covered by the provisions of the warranty, the item will be repaired or replaced, with the same or comparable item (at Intex's choice) at no charge to you.

Other than this warranty, and other legal rights in your country, no further warranties are implied. To the extent possibly in your country, in no event shall Intex be liable to you or any third party for direct or consequential damages arising out of the use of your Intex Inflatable Boat, or Intex or its agents' and employees' actions (including the manufacture of the product). If your country does not allow the exclusion or limitation of incidental or consequential damages, this limitation or exclusion does not apply to you.

You should note that this limited warranty does not apply in the following circumstances:
- If the Intex Inflatable Boat is subject to negligence, abnormal use or application, accident, improper operation, trailering or towing, improper maintenance or storage;
- If the Intex Inflatable Boat is subject to damage by circumstances beyond Intex's control, including but not limited to, punctures, tears, abrasions, or ordinary wear and tear;
- To parts and components not sold by Intex; and/or
- To unauthorized alterations, repairs or disassembly to the boat by anyone other than Intex Service Center personnel.

Read the owner's manual carefully and follow all instructions regarding proper operation and maintenance of your Intex Inflatable Boat. Always inspect your equipment prior to use. This limited warranty will be void if use instructions are not followed.

RECORD THE OWNER'S NAME, ADDRESS, PHONE NUMBER AND **WIN** BELOW:

_____
_____
_____
_____
_____
_____

SAVE THESE INSTRUCTIONS

Watercraft Identification Number

C	N	X	E	E	

(See product and/or packaging)

EU Declaration of Conformity of Recreational Craft with the Design, Construction and Noise Emission requirements of Directive 2013/53/EU

(To be completed by manufacturer or if mandated, authorised representative)

Name of recreational craft manufacturer: Intex Industries (Xiamen) Co., Ltd.
Address: No. 858 Wengjiao Road, Haicang District.
Town: Xiamen, Fujian **Post Code:** 361022 **Country:** P. R. of China

Name of Authorised Representative (if applicable)**:** Intex Trading B.V.
Address: Ettenseweg 46, 4706 PB Roosendaal
Town: _____ **Post Code:** _____ **Country:** Netherlands

Module used for design and construction assessment: ☒ **A** ☐ **A1** ☐ **B+C** ☐ **B+D** ☐ **B+E** ☐ **B+F** ☐ **G** ☐ **H**
Name of Notified Body for design and construction assessment (if applicable)**:** N/A
Address: _____
Town: _____ **Post Code:** _____ **Country:** _____ **ID Number:** _____
Notified Body certificate number (if applicable)**:** _____ **Date:** ____/____/____

Module used for noise emission assessment (if applicable)**:** ☐ **A** ☐ **A1** ☐ **G** ☐ **H**
Name of Notified Body for noise emission assessment (if applicable)**:** N/A
Address: _____
Town: _____ **Post Code:** _____ **Country:** _____ **ID Number:** _____
Notified Body certificate number (if applicable)**:** _____ **Date:** ____/____/____

Other Community Directives applied: _____

DESCRIPTION OF RECREATIONAL CRAFT

Brand name of the recreational craft: Seahawk 3 Set
Type or number: II

Type of Construction:
☐ Rigid ☒ Inflatable
☐ Rigid - inflatable (RIB)

Type of hull:
☒ Monohull ☐ Multihull

Hull Construction material:
☐ Aluminium, aluminium alloys ☒ Moulded, fiber reinforced plastic
☐ Steel, steel alloys ☐ Wood
☐ Other (specify): Inflatable PVC

Recreational Craft
Design category(-ies) related to the maximum recommend number of persons: category D / 3 persons
Engine power: **Max. Recommended: 1.1 kW,**
Installed: __/__ kW (if applicable)
Length of hull L_h: 2.95 m Beam of hull B_h: 1.37 m
Max. Draught T: __/__ m
Integral exhaust propulsion (if applicable): Yes ☐ No ☐
Maximum Recommended engine power: __/__ kW
Installed engine power: __/__ kW
Number of propulsion engines: __/__ #
Maximum recommended engine mass: 15 kg

Craft main Propulsion:
☐ Sails, projected sail area As ____ **m²**
☒ Human propulsion
☒ Engine/motor propulsion
☐ Other (specify): _____

Installed propulsion type (if applicable):
☐ Outboard ☐ Inboard with shaft line
☐ Z or sterndrive ☐ Pot derive
☐ Sail derive
☐ Other (specify): _____

Installed engine type (if applicable):
☐ Internal combustion, Diesel (CI)
☐ Internal combustion, Petrol (SI)
☐ Internal combustion, LPG/CNG
☐ Electric
☐ Other (specify): _____

Deck:
☐ Fully enclosed ☐ Partially protected
☒ Open

This declaration of conformity is issued under the sole responsibility of the manufacturer. I declare on behalf of the manufacturer that the recreational craft mentioned above fulfils the requirements specified in Article 4 (1) and Annex I of Directive 2013/53/EU.

Name and function: John Lee (QA Manager)
(identification of the person empowered to sign on behalf of the manufacturer or his authorised representative)

Signature and title: John Lee (QA Manager)
(or an equivalent marking)

Date and place of issue: **P. R. of China (yr/month/day) 2026 / 03 / 30**

Essential requirements (Reference to relevant articles in Annex IA & IC of the Directive)	**Harmonised standards** Full Application	**Harmonised standards** Partial Application, see tech. file	**Other reference documents** Full Application	**Other reference documents** Partial Application, see tech. file	**Other proof of conformity** See technical. file	**Specify the harmonised standards or other reference documents used** *(with year of publication like "EN ISO 8666:2020 +A11:2021")*
General requirements (2)						
Principal data – main dimensions	☒					EN ISO 8666:2020 +A11:2021
Watercraft identification (2.1)	☒					EN ISO 10087:2022
Watercraft builder's plate (2.2)	☒	☐	☐	☐	☐	EN ISO 6185-1:2018
Protection from falling overboard and means of reboarding (2.3)	☒	☐	☐	☐	☐	EN ISO 6185-1:2018
Visibility from the main steering position (2.4)	☐	☐	☒	☐	☐	ISO 11591:2020+A1:2023
Owner's manual (2.5)	☒	☐	☐	☐	☐	EN ISO 6185-1:2018
Integrity and structural requirements (3)						
Structure (3.1)	☒	☐	☐	☐	☐	EN ISO 6185-1:2018
Stability and freeboard (3.2)	☒	☐	☐	☐	☐	EN ISO 6185-1:2018
Buoyancy and floatation (3.3)	☒	☐	☐	☐	☐	EN ISO 6185-1:2018
Openings in hull, deck and superstructure (3.4)	☐	☐	☐	☐	☐	N/A
Flooding (3.5)	☐	☐	☐	☐	☐	N/A
Manufacturer's maximum recommended load (3.6)	☒	☐	☐	☐	☐	EN ISO 6185-1:2018
Liferaft stowage (3.7)	☐	☐	☐	☐	☐	N/A
Escape (3.8)	☐	☐	☐	☐	☐	N/A
Anchoring, mooring and towing (3.9)	☒	☐	☐	☐	☐	EN ISO 6185-1:2018
Handling characteristics (4)	☒	☐	☐	☐	☐	EN ISO 6185-1:2018
Engines and engine spaces (5.1)						
Inboard engine (5.1.1)	☐	☐	☐	☐	☐	N/A
Ventilation (5.1.2)	☐	☐	☐	☐	☐	N/A
Exposed parts (5.1.3)	☐	☐	☐	☐	☐	N/A
Outboard engine starting (5.1.4)	☐	☐	☐	☐	☐	N/A
Fuel system (5.2)						
General – fuel system (5.2.1)	☐	☐	☐	☐	☐	N/A
Fuel tanks (5.2.2)	☐	☐	☐	☐	☐	N/A
Electrical systems (5.3)	☐	☐	☐	☐	☐	N/A
Steering systems (5.4)						
General – steering system (5.4.1)	☐	☐	☐	☐	☐	N/A
Emergency arrangements (5.4.2)	☐	☐	☐	☐	☐	N/A
Gas systems (5.5)	☐	☐	☐	☐	☐	N/A
Fire protection (5.6)						
General – fire protection (5.6.1)	☐	☐	☐	☐	☐	N/A
Fire-fighting equipment (5.6.2)	☐	☐	☐	☐	☐	N/A
Navigation lights, shapes and sound signals (5.7)	☐	☐	☐	☐	☐	N/A
Discharge prevention (5.8)	☐	☐	☐	☐	☐	N/A
Annex I.B – Exhaust Emissions	See the Declaration of Conformity of the engine manufacturer					
Annex I.C – Noise Emissions[1]	☐	☐	☐	☐	☐	N/A
Noise emission levels (I.C.1)	☐	☐	☐	☐	☐	N/A
Owner's manual (I.C.2)	☐	☐	☐	☐	☐	N/A

[1] Only to be completed for boats with inboard engines or sterndrive engines without integral exhaust.