OWNER'S MANUAL

English **361 IOA**

IMPORTANT SAFETY RULES

Please read, understand, and follow all instructions carefully before installing and using this product. Keep for future reference.

Three Feature Swing Set

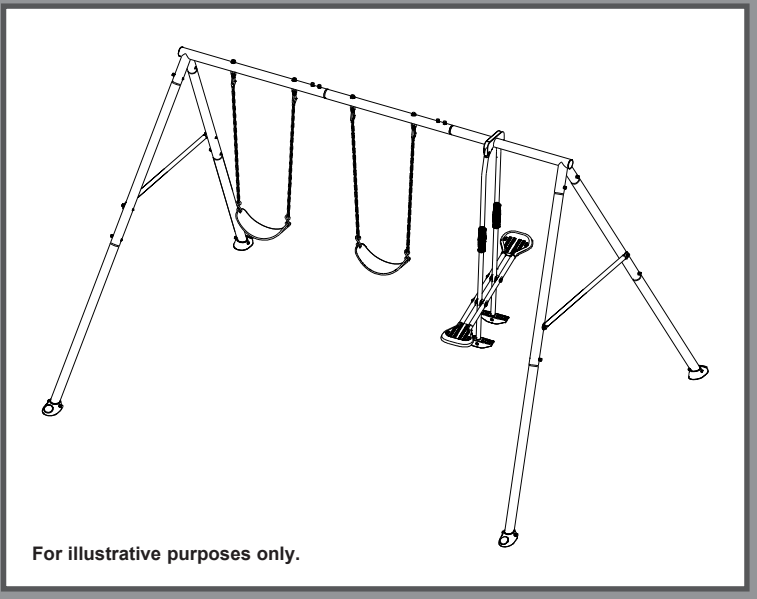

For illustrative purposes only.

Do not forget to try these other fine Intex products: pools, pool accessories, in-home toys, airbeds and boats available at fine retailers or visit our website.

Due to a policy of continuous product improvement, Intex reserves the right to change specifications and appearance, which may result in updates to the instruction manual without notice.

INTEX®

©2026 Intex Marketing Ltd. - Intex Development Co. Ltd. - Intex Recreation Corp. All rights reserved/Tous droits réservés/Todos los derechos reservados/Alle Rechte vorbehalten. Printed in China/Imprimé en Chine/Impreso en China/ Gedruckt in China.

®™ Trademarks used in some countries of the world under license from/®™ Marques utilisées dans certains pays sous licence de/Marcas registradas utilizadas en algunos países del mundo bajo licencia de/Warenzeichen verwendet in einigen Ländern der Welt in Lizenz von/**Intex Marketing Ltd. to/à/a/an Intex Development Co. Ltd., Hong Kong & Intex Recreation Corp., P.O. Box 1440, Long Beach, CA 90801** • Distributed in the European Union by/Distribué dans l'Union Européenne par/Distribuido en la unión Europea por/Vertrieb in der Europäischen Union durch/**Intex Trading B.V., Ettenseweg 46, 4706 PB Roosendaal – The Netherlands** • Distributed in the UK by **Unitex Service (UK) Limited, 124 City Road, London, England, EC1V 2NX, UK.**

www.intexcorp.com

361-IOA-R0-2705

TABLE OF CONTENTS

Warning..... 3-4

Parts..... 5-8

Set-up..... 9-19

Assembly preparation..... 9

Assembly of top beams and quick hooks..... 10-11

Assembly of legs..... 12-13

Assembly of glider..... 14-17

Assembly of chain swings..... 18

Anchor mounting..... 19

Maintenance..... 20

Warranty..... 21

SAVE THESE INSTRUCTIONS

IMPORTANT SAFETY RULES

Observing the following statements and warnings reduces the likelihood of serious or fatal injury.
Review these safety rules regularly with your children.

READ AND FOLLOW ALL INSTRUCTIONS

⚠ WARNING

- Before you assemble this product, find a level ground site with at least 2 m (6 ft) of clearance from any structure or obstruction. This product must have 2 m (6 ft) clearance on all sides.
- This product is for family domestic outdoor use only. Not designed for use in day care, nurseries, commercial or other public places.
- Continuous and competent adult supervision of children is required at all times when on or around this product. Never leave children unattended.
- This product is designed for use by children from ages 3 to 10 years under adult supervision. Children under 10 years have a higher risk of entrapment and injury.
- The maximum number of users this product is designed for is 4 children with a maximum weight of 50 kg (110 lbs) per child, or a combined weight not exceeding 200 kg (440 lbs). Do not exceed the intended weight limit or maximum number of users for this product.
- Only for domestic use. This product is to be assembled and disassembled by adults only.
- This product must be anchored before use. See anchoring section.
- To prevent serious injury, do not allow children to use this product until it is completely assembled and properly anchored.
- Do not install home playground equipment over concrete, asphalt or any other hard surface. The product should be installed over impact absorbing surfaces such as sand, wood-bark chips, rubber and foam. See **"Playground Surfacing Information"** section for detail.
- Warn children not to walk close to, in front of, behind, or between moving parts.
- Do not allow children to twist swing chains or ropes or loop them over the top support bar since this may reduce the strength of the chain or rope.
- Never add extra length to chain or rope. The chains or ropes provided are the maximum length designed for the swinging element(s).
- Do not allow children to swing empty seats.
- Teach and instruct children to sit in the center of the swings with their full weight on the seats.
- Closely assist children with use of this product until they have adequate strength, skills and comfort level for safe use without assistance.
- Do not allow children to use this product in a manner other than intended.
- Warn children not to get off the swings or rides while they are in motion.
- Ensure children are dressed appropriately. Wearing loose-fitting shoes and clothing such as scarfs and ponchos are potentially hazardous while using this product.
- Product may become slippery when wet or during bad weather, such as rain, snow, ice, etc. Do not allow children to use this product under such conditions.
- Verify that suspended swing and chains are secured at both ends and cannot be looped back on themselves.
- Do not allow children to attach any items to this product that are not specifically designed for use with the equipment, such as, but not limited to, jump ropes, clotheslines, pet leashes, cables and chain as they may cause a strangulation hazard.
- Warn children to remove their bike or other sports helmet before using this product.
- Do not allow children to swing too high or at an angle.
- Do not allow children to hang or climb from any structural members of this product.
- Do not modify this product and/or use accessories not supplied by the manufacturer.
- Check the warning label regularly to ensure the legibility of the warning label.

FAILURE TO FOLLOW THESE WARNINGS MAY RESULT IN PROPERTY DAMAGE, SERIOUS INJURY OR DEATH.

SAVE THESE INSTRUCTIONS

Playground Surfacing Information

Consumer information sheet for playground surfacing materials

The US Consumer Product Safety Commission (CPSC) estimates that about 100 000 playground equipment-related injuries resulting from falls to the ground surface are treated annually in US hospital emergency rooms. Injuries involving this hazard pattern tend to be among the most serious of all playground injuries, and have the potential to be fatal, particularly when the injury is to the head. The surface under and around playground equipment can be a major factor in determining the injury- causing potential of a fall. It is self-evident that a fall on to a shock-absorbing surface is less likely to cause a serious injury than a fall onto a hard surface. Playground equipment should never be placed on hard surfaces, such as concrete or asphalt, and while grass may appear to be acceptable, it may quickly turn to hard-packed earth in areas of high traffic. Shredded bark mulch, wood chips, fine sand or fine gravel are considered to be acceptable shock absorbing surfaces when installed and maintained at a sufficient depth under and around playground equipment.

Table 1 lists the maximum height from which a child would not be expected to sustain a life-threatening head injury in a fall on to four different loose-fill surfacing materials if they are installed and maintained at depths of 150 mm, 225 mm and 300 mm.

Table 1 — Fall height in millimetres from which a life-threatening head injury would not be expected

Type of material	Depth of surfacing material		
	150 mm	225 mm	300 mm
Double shredded bark mulch	1 800	3 000	3 300
Wood chips	1 800	2 100	3 600
Fine sand	1 500	1 500	2 700
Fine gravel	1 800	2 100	3 000

However, it should be recognized that all injuries due to falls cannot be prevented, no matter what surfacing material is used.

It is recommended that a shock absorbing material extend a minimum of 1 800 mm in all directions from the perimeter of stationary equipment such as climbing frames and slides. However, because children may deliberately jump from a moving swing, the shock absorbing material should extend in the front and rear of a swing a minimum distance of twice the height of the pivot point measured from a point directly beneath the pivot on the supporting structure.

This information is intended to assist in comparing the relative shock-absorbing properties of various materials. No particular material is recommended over another. However, each material is only effective when properly maintained. Materials should be checked periodically and replenished to maintain correct depth as determined necessary for the equipment in question. The choice of a material depends on the type and height of the playground equipment, the availability of the material in a particular area, and its cost.

This information has been extracted from the CPSC publications *"Playground Surfacing — Technical Information Guide" and "Handbook for Public Playground Safety".*

SAVE THESE INSTRUCTIONS

PARTS

Before assembling your product, please take a few minutes to check the contents and become familiar with all the parts.

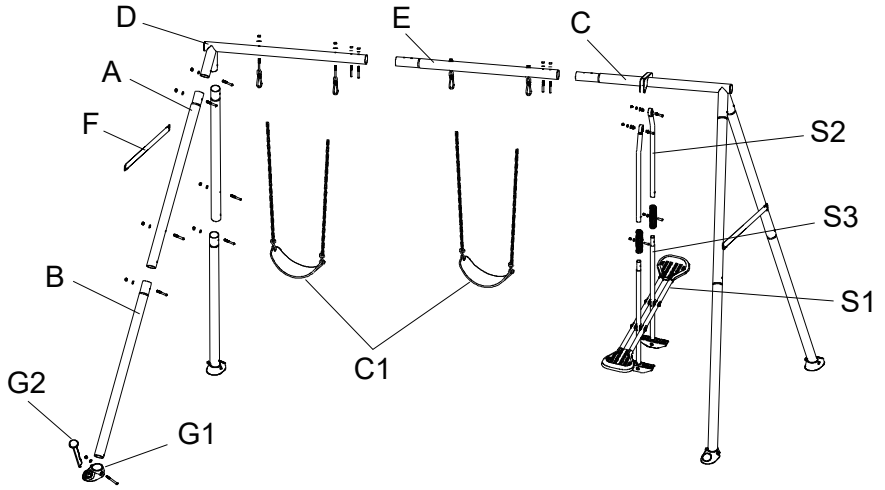

NOTE: Drawings for illustration purpose only. Not to scale.

REF. NO.	DESCRIPTION	QTY.	MODEL 44121	MODEL 44123
			PART NO.	
A	Top leg	4	13380A	13380G
B	Bottom leg	4	13381B	13381G
C	Glider beam end	1	13377A	13377G
D	Swing beam end	1	13376A	13376G
E	Center swing beam	1	13378A	13378G
F	Cross bar	2	13382A	13382G
G1	Anchor foot base	4	13303B	13303G
G2	Anchor rod	4	13302B	13302G
HS10	Long bolt set (H1+H4+H16)	4	13481	13481
HS11	Short bolt set (H4+H15+H16)	16	13482	13482
HS3	Long barrel nut set (H4+H6+H8+H9)	2	13304D	13304D
HS4	Short barrel nut set (H4+H7+H8+H9)	4	13304C	13304C
HS12	Quick hook with bolt set (H4+H16+H17)	4	13483	13483
C1	Chain swing	2	13386	13386
S1	Glider seat assembly	1	13385	13385
S2	Glider top leg	2	13383	13383
S3	Glider bottom leg	2	13384	13384
S4	Pole hand grip	2	13317	13317
S5	End cap (pre-installed in S2)	2	13318	13318
S8	Insert bearing	4	13320	13320
S9	Gasket set (S6+S7)	6	13319	13319

Hardware Identification

The reference number is printed on the hardware box. During assembly you only need to check the reference number of the part number as noted in each step. This will make finding the correct hardware easier.

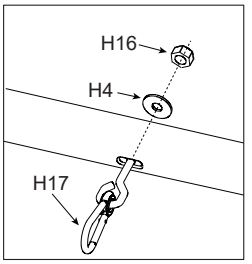

SAVE THESE INSTRUCTIONS

PARTS (continued)

Before assembling your product, please take a few minutes to check the contents and become familiar with all the parts.

Hardware components (A-frame)

Verify that all the parts and sub-assemblies are accounted for, and carefully arrange the parts per below drawings.

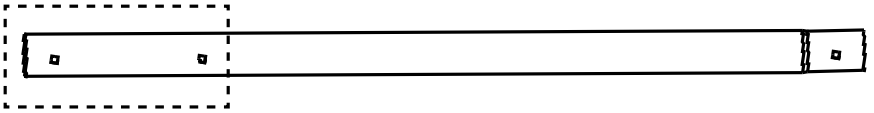

[A] Top leg (x4)

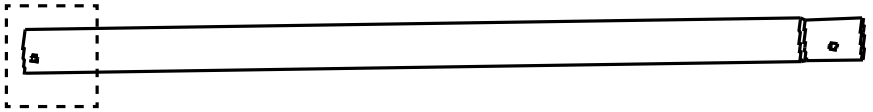

[B] Bottom leg (x4)



[G1] Anchor foot base (x4)

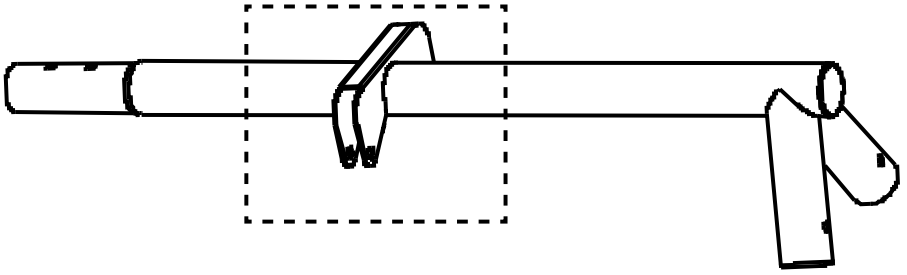

[C] Glider beam end (x1)

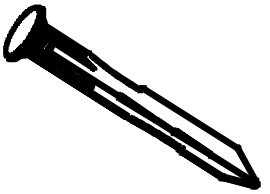

[G2] Anchor rod (x4)

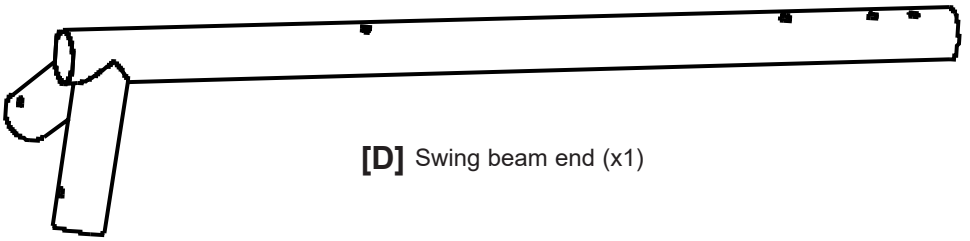

[D] Swing beam end (x1)

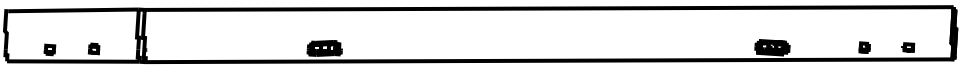

[E] Center swing beam (x1)

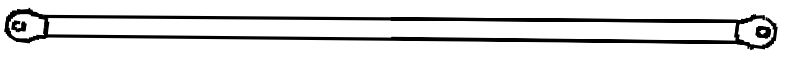

[F] Cross bar (x2)

SAVE THESE INSTRUCTIONS

PARTS (continued)

Before assembling your product, please take a few minutes to check the contents and become familiar with all the parts.

Hardware components

Verify that all the parts and sub-assemblies are accounted for, and carefully arrange the parts per below drawings.

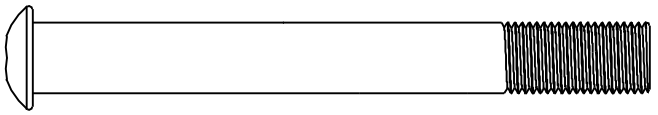

[H1] Long bolt M10 x 80 mm (x4)

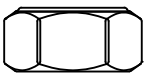

[H16] Nut M10 x 9 mm (x24)

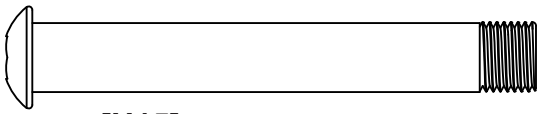

[H15] Short bolt M10 x 70 mm (x16)



[H4] Flat washer Ø10 mm (x28)

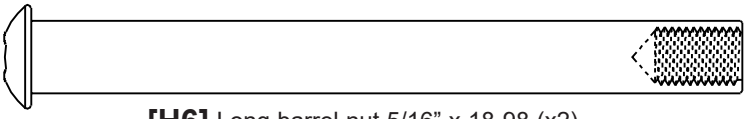

[H6] Long barrel nut 5/16" x 18-98 (x2)

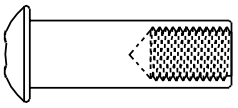

[H7] Short barrel nut 5/16" x 18-30 (x4)

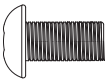

[H8] Bolt 5/16" x 18-16 (x6)



[H9] Split washer Ø8 mm (x6)



[H17] Quick hook with bolt (x4)



[C1] Chain swing (x2)

SAVE THESE INSTRUCTIONS

PARTS (continued)

Before assembling your product, please take a few minutes to check the contents and become familiar with all the parts.

Hardware components (Glider)

Verify that all the parts and sub-assemblies are accounted for, and carefully arrange the parts per below drawings.

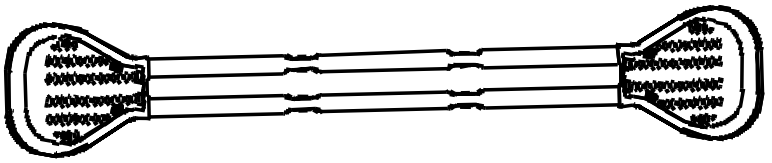

[S1] Glider seat assembly (x1)

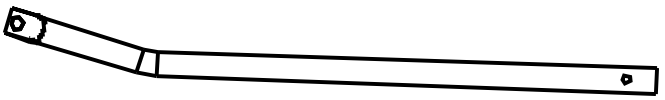

[S2] Glider top leg (x2)

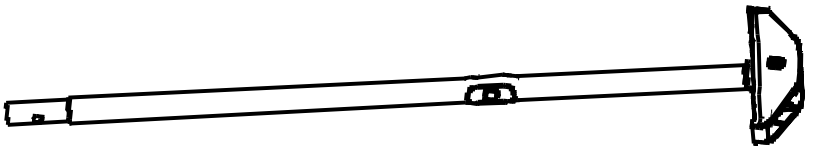

[S3] Glider bottom leg (x2)



[S4] Pole hand grip (x2)

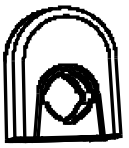

[S5] End cap (x2)

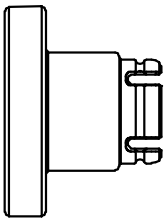

[S6] Gasket A (x6)

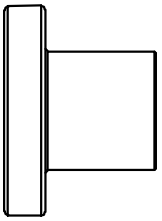

[S7] Gasket B (x6)

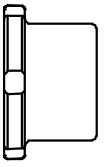

[S8] Insert bearing (x4)

SAVE THESE INSTRUCTIONS

SET UP

Site preparation and requirements

- Place the product on level ground, with at least a 2 m (6 ft) space from any structure or obstruction such as a fence, garage, house, overhanging branches, laundry lines, lamp post, or electrical wires.
- Create a site free of obstacle that could cause injuries – such as tree stumps and/or roots, bricks, rocks, sprinkler heads and concrete.
- Swings should be further away from structures to the front and rear of the swings – a distance equal to twice the height of the top bar from which the swing is suspended.

ASSEMBLY PREPARATION

Selecting the Swing Set final location

- The area where the Swing Set is to be set up must be absolutely flat and level. Do not set up the product on a slope or inclined surface.
- In addition to the 2 m (6') minimum horizontal clearance space all around the set, your site must have a minimum of 4 m (13') of vertical ground clearance. This height requirement requires 2 m (6') of vertical clearance above the top of the Swing Set.

General Information:

- The maximum number of users this product is designed for is 4 children with a maximum weight of 50 kg (110 lbs) per child, or a combined weight not exceeding 200 kg (440 lbs).
- Ground Dimension: 3.23 m (10′7″) X 2.35 m (7′8.5″); safe Play Area: 7.24 m (23′9″) X 8.2 m (26′11″). Safe Play Height: 4 m (13′1.5″); maximum Height: 2 m (6′7″); maximum Fall Height: 1.92 m (6′3.5″).

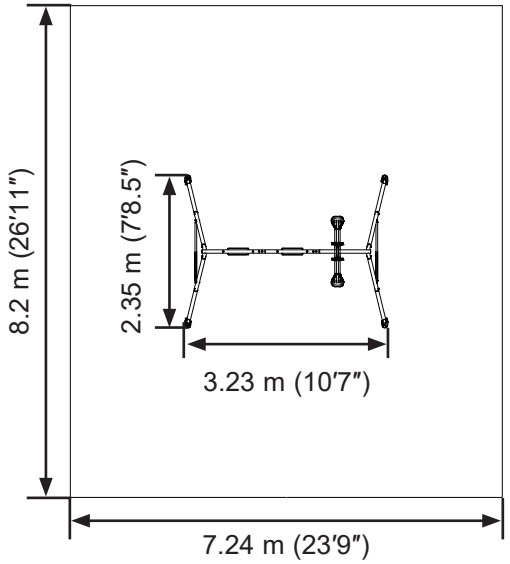

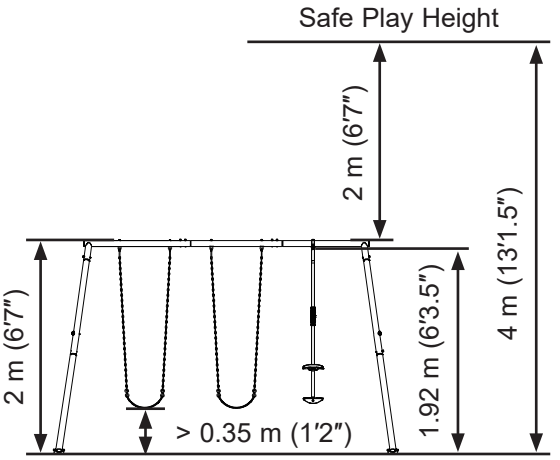

Preparing the Swing Set for assembly

- Transport the carton to the final site.
- A minimum of two adults is required for the assembly of the Swing Set.
  NOTE: Follow the instructions step by step for a correct assembly. Failure to do so may result in incorrect assembly.

Tools required for installation:

One (1) wrench and two (2) hexagon keys (included tools). Hammer, tape measure and level tool (tools not included).

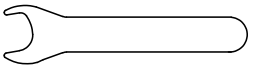

Wrench x1
(included)

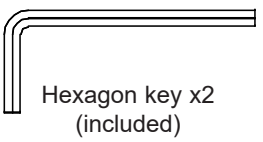

Hexagon key x2
(included)

SAVE THESE INSTRUCTIONS

SET UP (continued)

ASSEMBLY OF TOP BEAMS

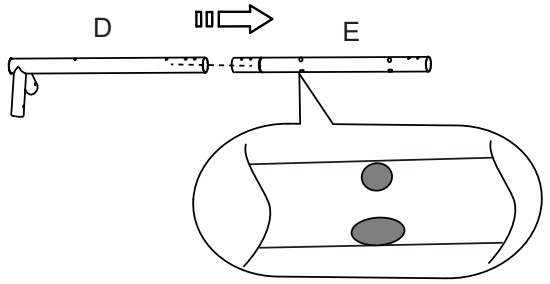

H15 (x4) 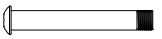	H16 (x4) 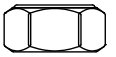
H4 (x4) 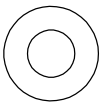	

Important: assemble the center swing beam (E) with the round holes at the top and the oval openings at the bottom!

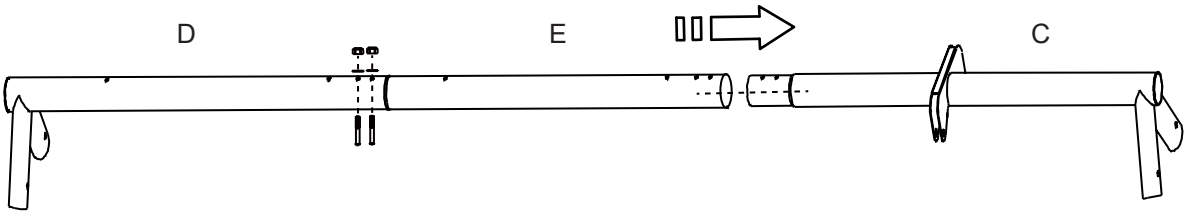

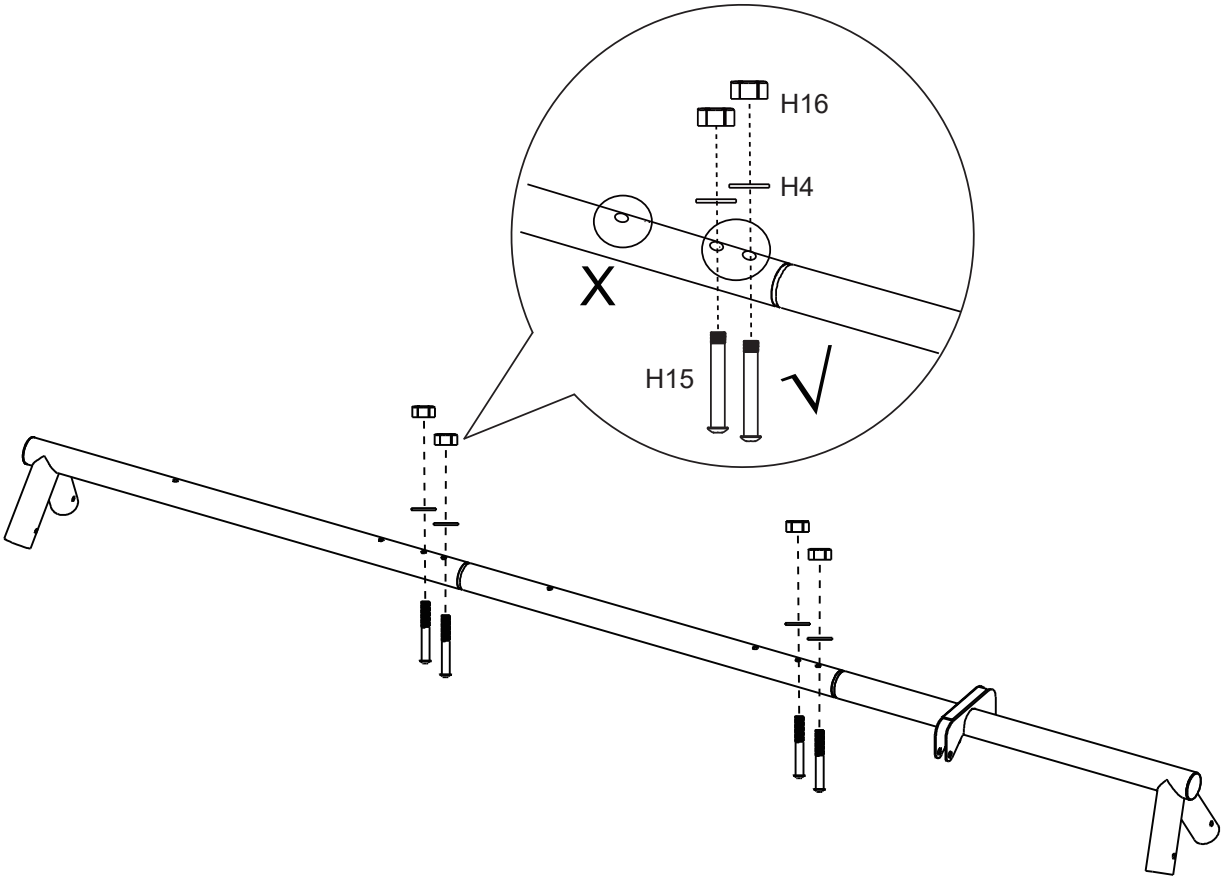

SAVE THESE INSTRUCTIONS

SET UP (continued)

ASSEMBLY OF QUICK HOOKS

H16 (x4) 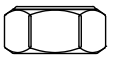	H17 (x4) 
H4 (x4) 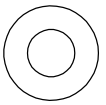	

SAVE THESE INSTRUCTIONS

SET UP (continued)

ASSEMBLY OF A-FRAME -
Top legs (A)

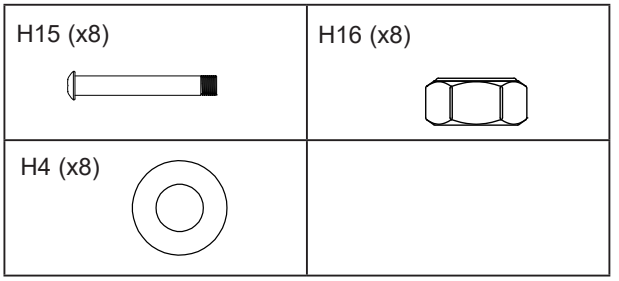

ASSEMBLY OF A-FRAME -
Cross bars (F)

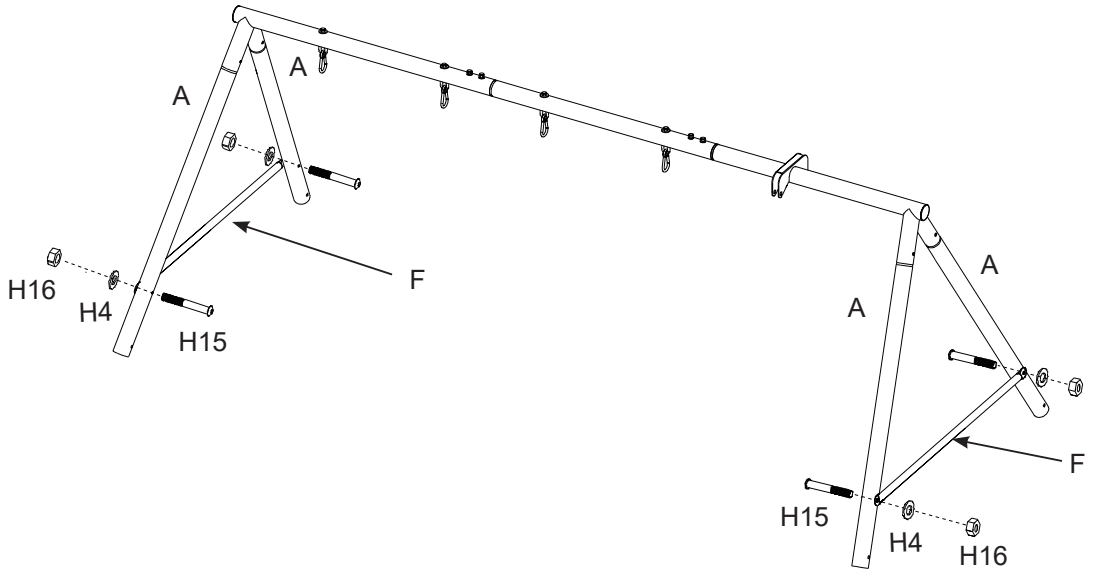

SAVE THESE INSTRUCTIONS

SET UP (continued)

ASSEMBLY OF A-FRAME -
Anchor foot bases (G1)

H1 (x4) 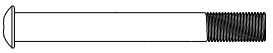	H16 (x4) 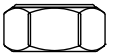
H4 (x4) 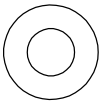	

ASSEMBLY OF A-FRAME -
Bottom legs (B)

H15 (x4) 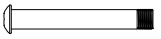	H16 (x4) 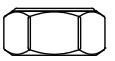
H4 (x4) 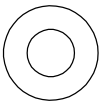	

SAVE THESE INSTRUCTIONS

SET UP (continued)

ASSEMBLY OF GLIDER -
Glider bottom legs (S3) and glider seat assembly (S1).

It's very important to use the correct parts.
Do not use the insert bearings (S8) !

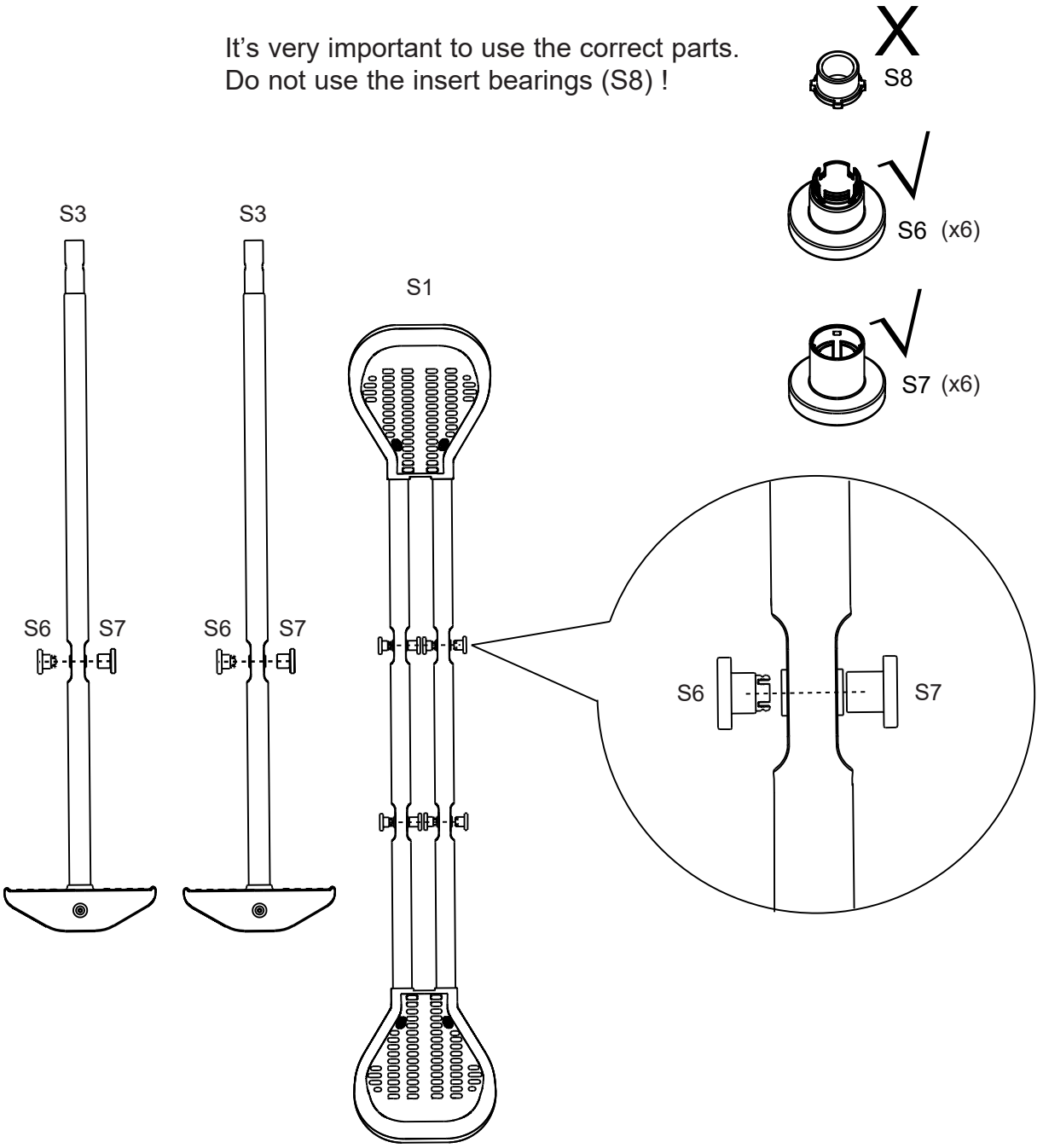

SAVE THESE INSTRUCTIONS

SET UP (continued)

ASSEMBLY OF GLIDER -
Push long barrel nut (H6) into the holes securing the glider bottom leg (S3) to the glider seat assembly (S1).

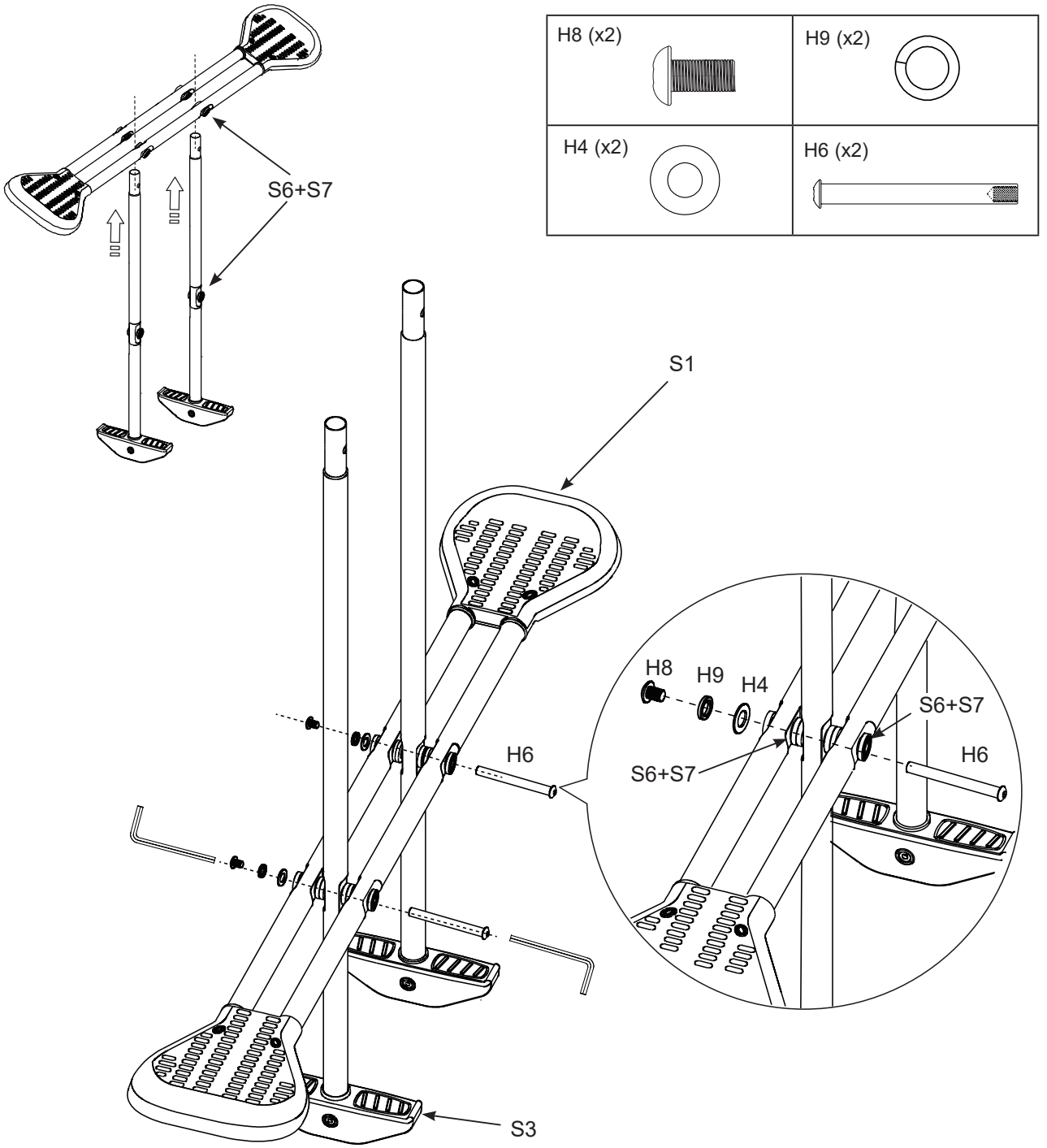

SAVE THESE INSTRUCTIONS

SET UP (continued)

ASSEMBLY OF GLIDER -
Glider top legs (S2)

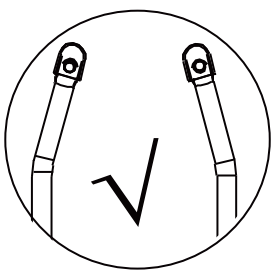

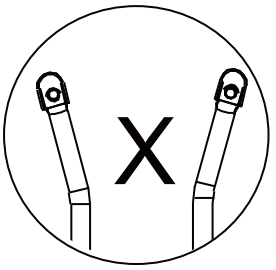

H8 (x2) 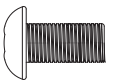	H9 (x2) 
H7 (x2) 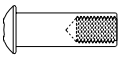	

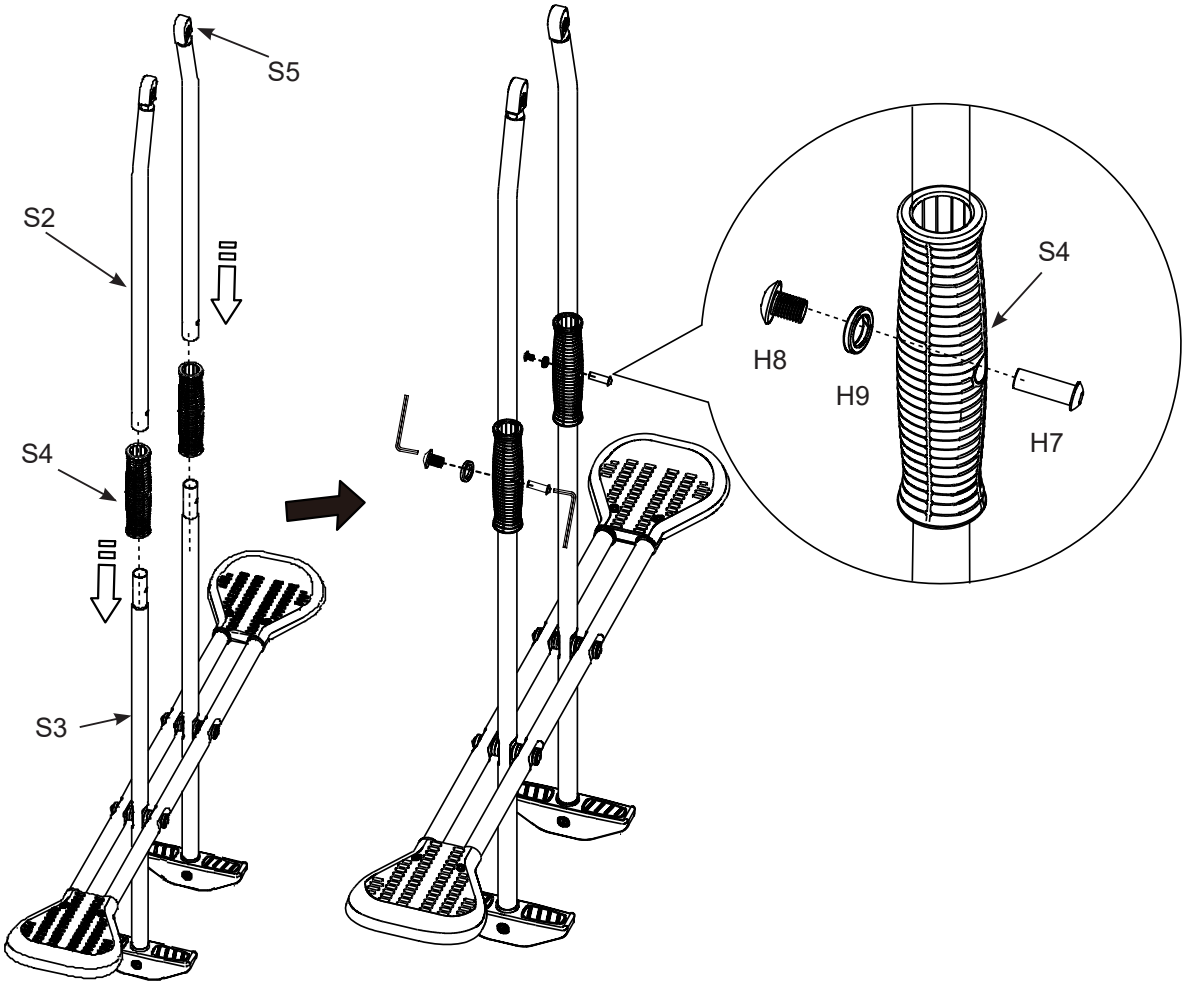

SAVE THESE INSTRUCTIONS

SET UP (continued)

ASSEMBLY OF GLIDER -

Hold the glider assembly up to the bracket on the top beam. Make sure the insert bearings (S8) are in place and secure the glider to the beam bracket with short barrel nut (H7).

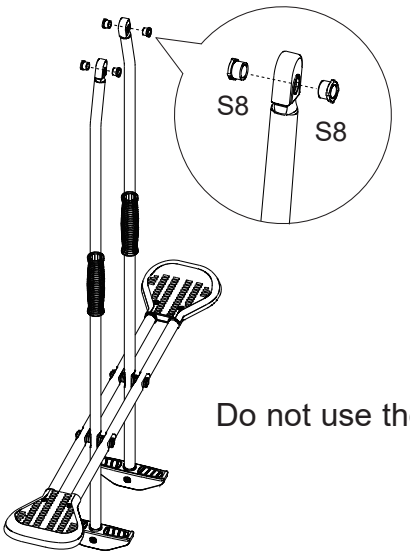

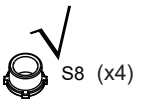





H8 (x2) 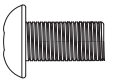	H9 (x2) 
H7 (x2) 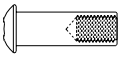	H4 (x2) 

Do not use the gasket A (S6) and gasket B (S7) !

NOTE: Make sure the split washers (H9) and the flat washers (H4) are correctly installed when attaching the glider to the beam bracket. Check all the bolts and nuts are securely tightened.

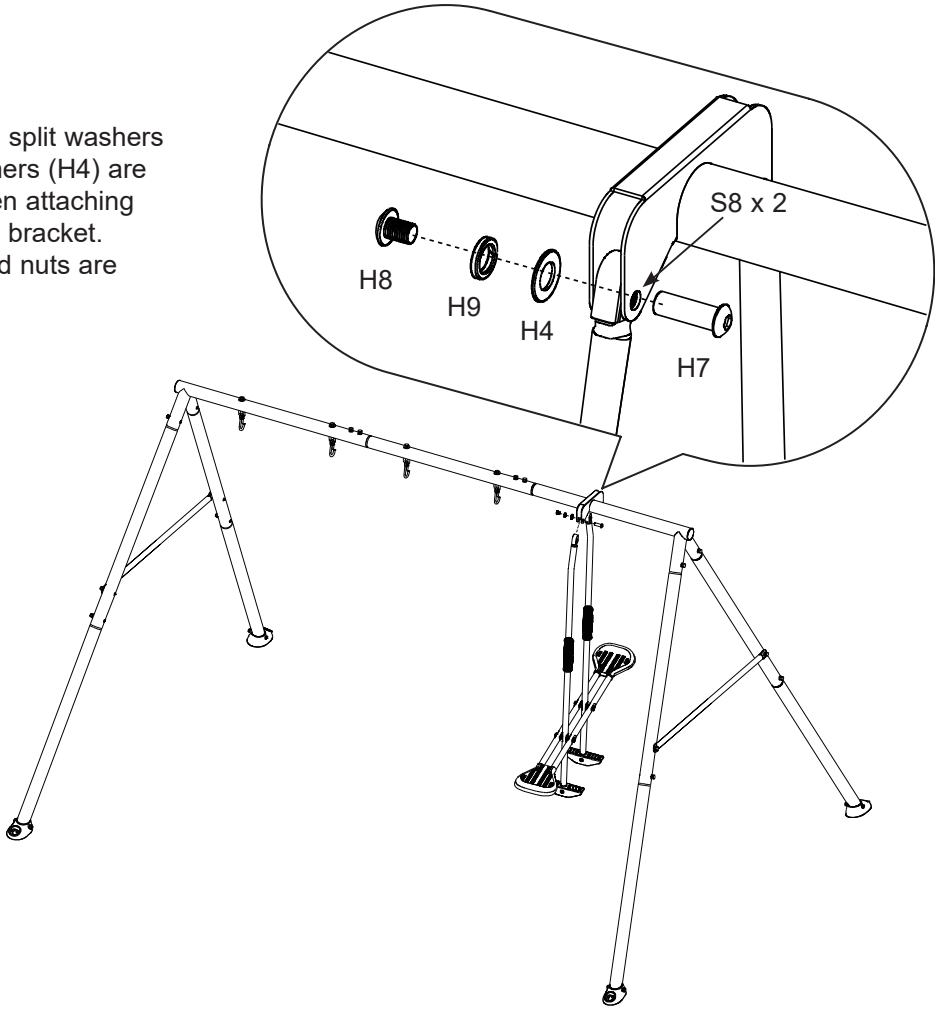

SAVE THESE INSTRUCTIONS

SET UP (continued)

ASSEMBLY OF CHAIN SWINGS -
Hang the chain swings (C1) to the quick hooks (H17).

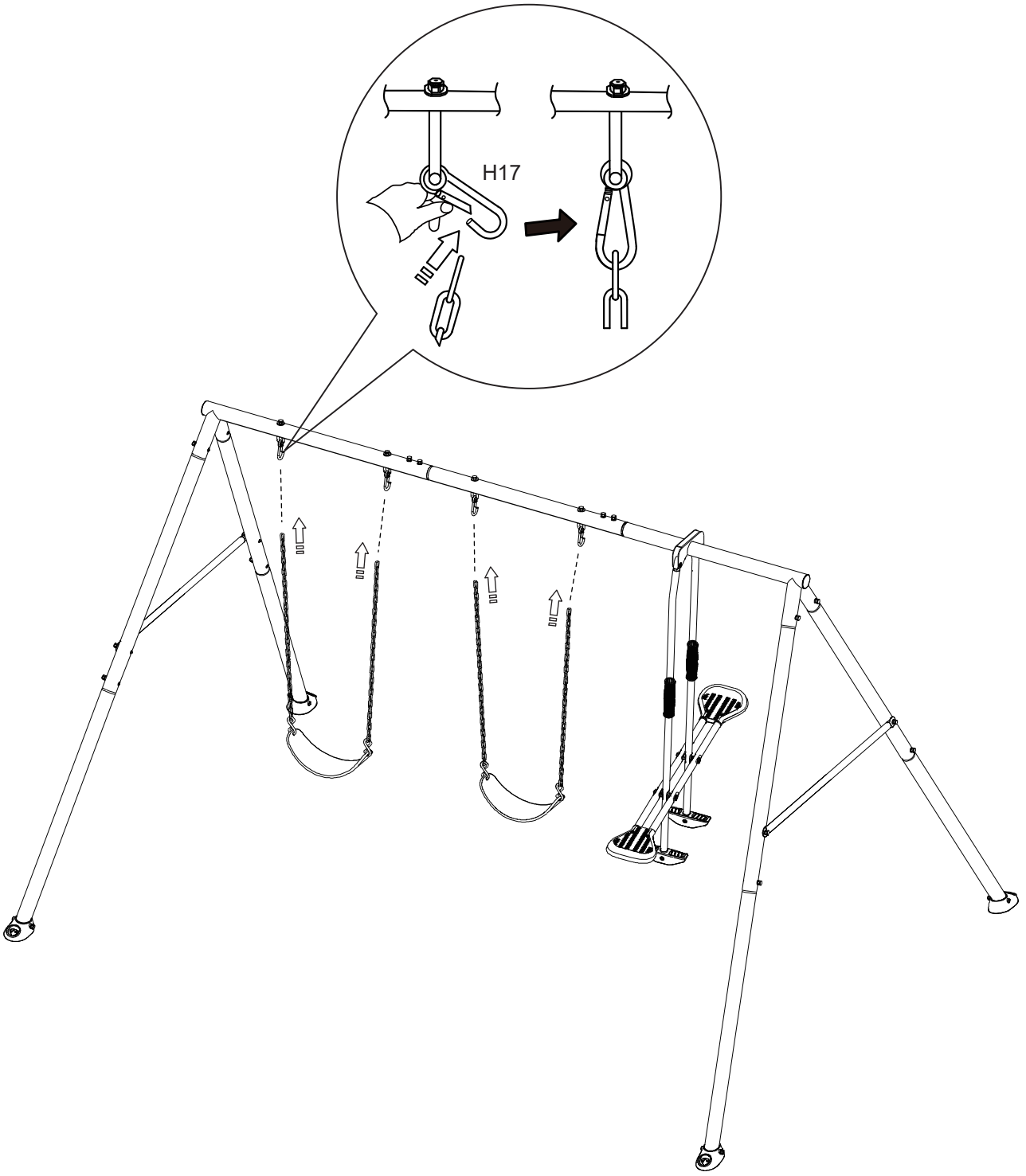

SAVE THESE INSTRUCTIONS

SET UP (continued)

ANCHOR FOOT BASES MOUNTING -

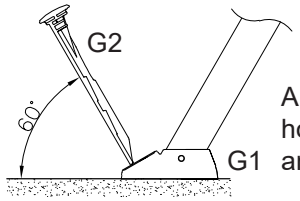

Angle between horizontal level ground and anchor rod (G2)

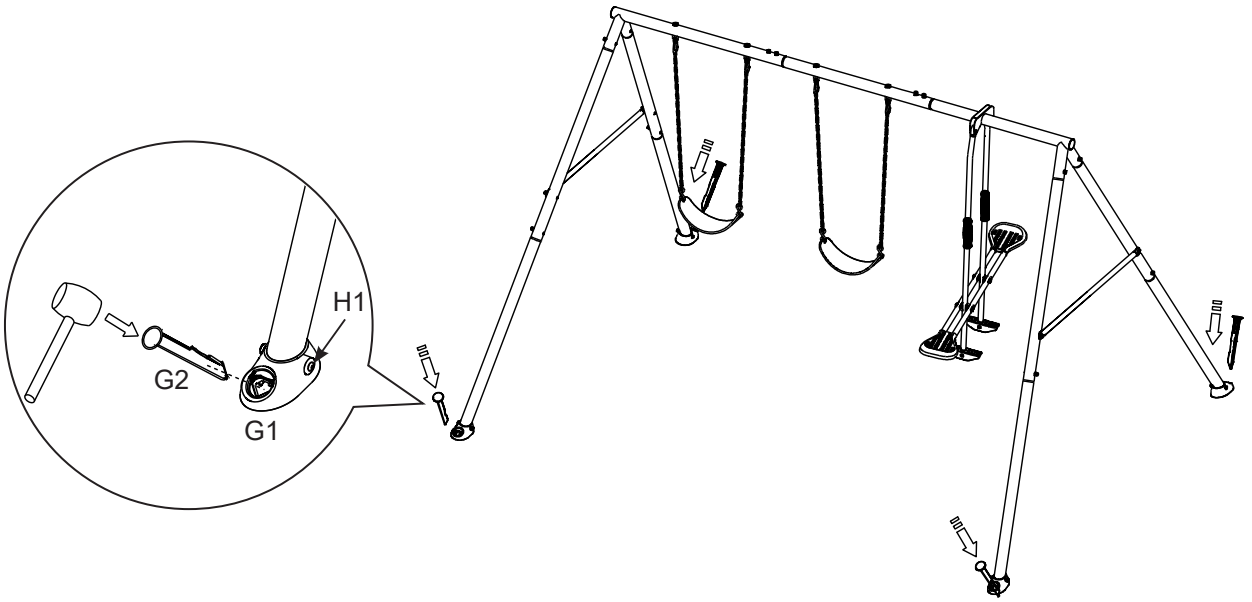

1. Secure anchor foot bases in concrete (not included). Level Swing Set and mark anchor foot base locations. Dig holes 30 cm (11.8") in diameter by 35 cm (13.8") deep.
2. Place two bricks inside the hole to form a solid base.
3. Lay the anchor foot bases **(G1)** on the bricks, insert the anchor rods **(G2)** through the anchor foot bases. Fill all holes with concrete to preset leveled height**.**
4. Anchors shall be placed level with or under the ground in order to reduce tipping hazards; replace defective parts in accordance with the manufacturer's instructions.
5. Allow concrete to cure properly, according to concrete manufacturer's directions, before using the product.

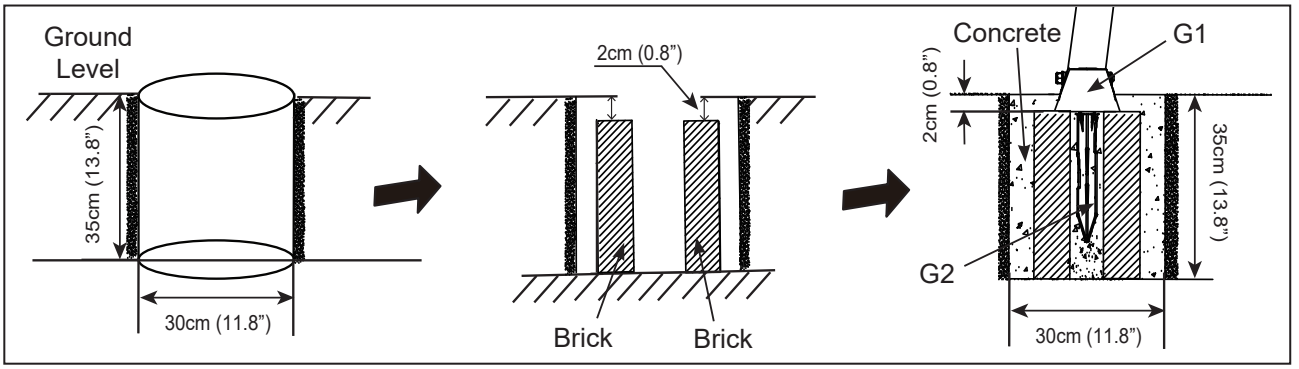

SAVE THESE INSTRUCTIONS

MAINTENANCE

IT IS IMPORTANT TO CHECK AND TIGHTEN ALL HARDWARE AT THE BEGINNING AND DURING THE SEASON.

At the beginning of each play season:
- Tighten all hardware.
- Lubricate all metallic moving parts.
- Check all protective coverings on bolts, pipes, edges, and corners. Replace if they are loose, cracked, or missing.
- Check all moving parts including swing seats, ropes, cables, and chains for wear, rust, or other deterioration. Replace as needed.
- Check metal parts for rust. If found, sand and repaint using a nonlead-based paint meeting the requirements of 16 CFR 1303.
- Reinstall any plastic parts, such as swing seats or any other items that were removed for the cold season.
- Rake and check depth of loose fill protective surfacing materials to prevent compaction and to maintain appropriate depth. Replace as necessary.

Twice a month during play season:
- Tighten all hardware.
- Check all protective coverings on bolts, pipes, edges, and corners. Replace if they are loose, cracked, or missing.
- Rake and check depth of loose fill protective surfacing materials to prevent compaction and to maintain appropriate depth. Replace as necessary.

Once a month during play season:
- Lubricate all metallic moving parts.
- Check all moving parts including swing seats, ropes, cables, and chains for wear, rust, or other deterioration. Replace as needed.

At the end of each season or when the temperature drops below 0 °C (32 °F)
- Remove plastic swing seats and other items as specified by the manufacturer and take indoors or do not use.
- Rake and check depth of loose fill protective surfacing materials to prevent compaction and to maintain appropriate depth. Replace as necessary.

Owners shall be responsible for maintaining the legibility of the warning labels.

Disposal instructions:
- Disassemble and dispose of the playground equipment in such a way that no unreasonable hazards will exist at the time the equipment is discarded. Follow all local disposal requirements.
- Fully disassemble the entire frame. Do not leave partially disassembled parts in areas accessible by children.
- Should you wish to recycle the steel tubing, take the frame to your local recycling center.
- All plastic parts can be recycled, take it to your local recycling center.
- Do not let children play with any disassembled parts meant for disposal, such as chains, tubing, bolts, nuts, screws, etc.
- All rusted parts, bolts must be properly disposed of. Do not reuse them.

Save this instruction and information sheet in the event that the manufacturer has to be contacted.

SAVE THESE INSTRUCTIONS

LIMITED WARRANTY

Your Intex Three Feature Swing Set has been manufactured using the highest quality materials and workmanship. All Intex products have been inspected and found free of defects prior to leaving the factory. This Limited Warranty applies to the Intex Three Feature Swing Set only.

This limited warranty is in addition to, and not a substitute for, your legal rights and remedies. To the extent that this warranty is inconsistent with any of your legal rights, they take priority. For example, consumer laws across the European Union provide statutory warranty rights in addition to the coverage you receive from this limited warranty: for information on EU-wide consumer laws, please visit the European Consumer Center website at http://ec.europa.eu/consumers/ecc/contact_en/htm.

The provisions of this limited warranty apply only to the original purchaser and are not transferable. This limited warranty is valid for the period noted below from the latter of the date of the initial retail purchase or delivery. Keep your original sales receipt with this document, as proof of purchase will be required and must accompany warranty claims or the limited warranty will be invalid.

Three Feature Swing Set Warranty – 2 Years

If you find a manufacturing defect in the Three Feature Swing Set during the warranty periods noted above, please contact the appropriate Intex Service Center listed in the separate "Authorized Service Centers" sheet. If the item is returned as directed by the Intex Service Center, the Service Center will inspect the item and determine the validity of the claim. If the item is covered by the provisions of the warranty, the item will be repaired or replaced, with the same or comparable item (at Intex's choice) at no charge to you.

Other than this warranty, and other legal rights in your country, no further warranties are implied. To the extent possibly in your country, in no event shall Intex be liable to you or any third party for direct or consequential damages arising out of the use of your Intex Three Feature Swing Set, or Intex or its agents' and employees' actions (including the manufacture of the product). If your country does not allow the exclusion or limitation of incidental or consequential damages, this limitation or exclusion does not apply to you.

You should note that this limited warranty does not apply in the following circumstances:

- If the Intex Three Feature Swing Set is subject to negligence, abnormal use or application, accident, improper operation, improper maintenance or storage.
- If the Intex Three Feature Swing Set is subject to damage by circumstances beyond Intex's control, including but not limited to, ordinary wear and tear and damage caused by exposure to fire, flood, freezing, rain, or other external environmental forces;
- To parts and components not sold by Intex; and/or.
- To unauthorized alterations, repairs or disassembly to the Intex Three Feature Swing Set by anyone other than Intex Service Center personnel.

Injury or damage to any property or person is not covered by this warranty.

Read the owner's manual carefully and follow all instructions regarding proper operation and maintenance of your Three Feature Swing Set. Always inspect your product prior to use. This limited warranty will be void if use instructions are not followed.

SAVE THESE INSTRUCTIONS

2503

A-Frame Brace (13464) Installation / A-Installation de l'entretoise du cadre (13464) / Instalación de la abrazadera del armazón en A (13464) / A-Gestell-Befestigung (13464) / Installazione della fascette (13464) sulla struttura ad A / Installatie van A-framesteun (13464) / Instalação da braçadeira da estrutura A (13464) / Montering af beslaget på A-rammen (13464) / Montaż usztywnienia ramy w kształcie litery A (13464) / Установка кронштейна А-образной рамы (13464) / A フレーム留め具 (13464) の取り付け / A 型支架（13464）安装 / A – Ramstag (13464) installation / Installasjon av A-Frame Brace (13464) / A-rungon poikkituen (13464) asennus / Εγκατάσταση άγκιστρου πλαισίου σχήματος A (13464) / Instalace výztuhy rámu A (13464) / Postavljanje poprečne prečke A-okvira (13464) / A veida rāmja stiprinājums (13464) Uzstādīšana / A formos karkaso (13464) montavimas / Inštalácia výstuhy rámu A (13464) / Namestitev opornika A-okvirja (13464) / Instalarea brațului pentru cadrul A (13464) / Инсталиране на скобата за рамка A (13464) / Postavljanje poprečne prečke A-okvira (13464) / A-keret merevítő (13464) felszerelése / A Şasi Destek Kolu (13464) Montajı

