OWNER'S MANUAL

IMPORTANT SAFETY RULES

Read, understand, and follow all instructions carefully before installing and using this product. Keep for future reference. Save these instructions.

SX1500 with WiFi™
Krystal Clear® Sand Filter Pump

Certified Model Number SFW90220
220 - 240 V~, 50 Hz, 130 W
Hmax 3.0 m, Hmin 0.19 m, IPX4
Max. Water Temperature 35 °C



WiFi APP QR Code

For illustrative purposes only.

Don't forget to try these other fine Intex products: pools, pool accessories, inflatable pools and in-home toys, airbeds and boats available at fine retailers or visit our website.
Due to a policy of continuous product improvement, Intex reserves the right to change specifications and appearance, which may result in updates to the instruction manual without notice.

Warning..... 1
Parts reference..... 2-3
Setup instructions..... 3-6
Product specifications..... 4
Operating instructions..... 6-8
Intex pools operating time table..... 9
Non-intex pools operating time table..... 9
Pool care and chemicals..... 9
Long term storage..... 10
Troubleshooting guide..... 10
Wifi app troubleshooting..... 11
Common pool problems..... 11
General aquatic safety..... 12
Limited warranty..... 12

⚠ WARNING

- Always supervise children and those with disabilities.
- Children must stay away from this product and electrical cord(s).
- Children shall not play with the appliance.
- This appliance can be used by persons with reduced physical, sensory or mental capabilities or lack of experience and knowledge if they have been given supervision or instruction concerning use of the appliance in a safe way and understand the hazards involved.
- Assembly and disassembly by adults only.
- Risk of electric shock. Connect this product only to a grounding type receptacle protected by a ground-fault circuit interrupter (GFCI) or residual current device (RCD). Contact a qualified electrician if you cannot verify that the receptacle is protected by a GFCI/RCD. Use a qualified electrician to install the GFCI/RCD, which has a maximum rate of 30 mA. Do not use a portable residual current device (PRCD).
- Always unplug this product from the electrical outlet before removing, cleaning, servicing or making any adjustment to the product. Always disconnect the appliance from the supply before assembling, disassembling or cleaning.
- The plug must be accessible after product is installed.
- Do not bury the electrical cord. Locate the cord where it will not be damaged by lawn mowers, hedge trimmers and other equipment.
- If the supply cord is damaged, it must be replaced by the manufacturer, its service agent or similarly qualified persons in order to avoid a hazard.
- To reduce the risk of electric shock, do not use extension cords, timers, plug adaptors or converter plugs to connect unit to electric supply; provide a properly located outlet.
- Do not attempt to plug in or unplug this product while standing in water or when your hands are wet.
- Keep this product more than 2 m away from the pool.
- Keep this product more than 3.5 m away from the pool (for France only).
- Keep the plug of this product more than 3.5 m away from the pool.
- Position this product away from the pool, so as to prevent children from climbing on it and accessing the pool.
- Do not operate this product when pool is occupied.
- This product is for use with storable pools only. Do not use with permanently installed pools. A storable pool is constructed so that it may be readily disassembled for storage and reassembled to its original configuration.
- To reduce the risk of entrapment hazard, never enter the pool if suction strainer component is loose, broken, cracked, damaged or missing. Replace loose, broken, damaged, cracked or missing suction strainer components immediately.
- Never play or swim near suction fittings. Your body or hair may be trapped causing permanent injury or drowning.
- To prevent equipment damage and risk of injury, always turn pump off before changing the filter control valve position.
- Never operate this product above the maximum working pressure stated on the filter tank.
- Hazardous Pressure. Improper tank valve cover assembly could cause the valve cover to blow off and cause serious injury, property damage or death.
- This product shall not be left outside during freezing weather conditions as it is not protected against the effect of freezing temperature.
- **Never put chemical tablets in the pump, filter, or any part of the circulation system. Use only in approved floating dispensers or chemical feeders and always follow directions on chemical packages. Incorrect use may cause explosion, serious injury, death, or property damage.**
- This product is intended to be used only for the purposes described in the manual!

FAILURE TO FOLLOW THESE WARNINGS MAY RESULT IN PROPERTY DAMAGE, ELECTRIC SHOCK, ENTANGLEMENT OR OTHER SERIOUS INJURY OR DEATH.

These product warnings, instructions and safety rules provided with the product represent some common risks of water recreation devices and do not cover all instances of risk and danger. Please use common sense and good judgement when enjoying any water activity.

INTEX® ©2026 Intex Marketing Ltd. - Intex Development Co. Ltd. - Intex Recreation Corp. All rights reserved/Tous droits réservés/Todos los derechos reservados/Alle Rechte vorbehalten. Printed in China/Imprimé en Chine/Impreso en China/Gedruckt in China.
®™ Trademarks used in some countries of the world under license from/®™ Marques utilisées dans certains pays sous licence de/Marcas registradas utilizadas en algunos países del mundo bajo licencia de/Warenzeichen verwendet in einigen Ländern der Welt in Lizenz von/Intex Marketing Ltd. to/à/a/an Intex Development Co. Ltd., Hong Kong & Intex Recreation Corp., P.O. Box 1440, Long Beach, CA 90801 • Distributed in the European Union by/Distribué dans l'Union Européenne par/Distribuido en la unión Europea por/Vertrieb in der Europäischen Union durch/Intex Trading B.V., Ettenseweg 46, 4706 PB Roosendaal – The Netherlands • Distributed in the UK by Unitex Service (UK) Limited, 124 City Road, London, England, EC1V 2NX, UK.
www.intexcorp.com

PARTS REFERENCE

Before assembling your product, please take a few minutes to check the contents and become familiar with all the parts.

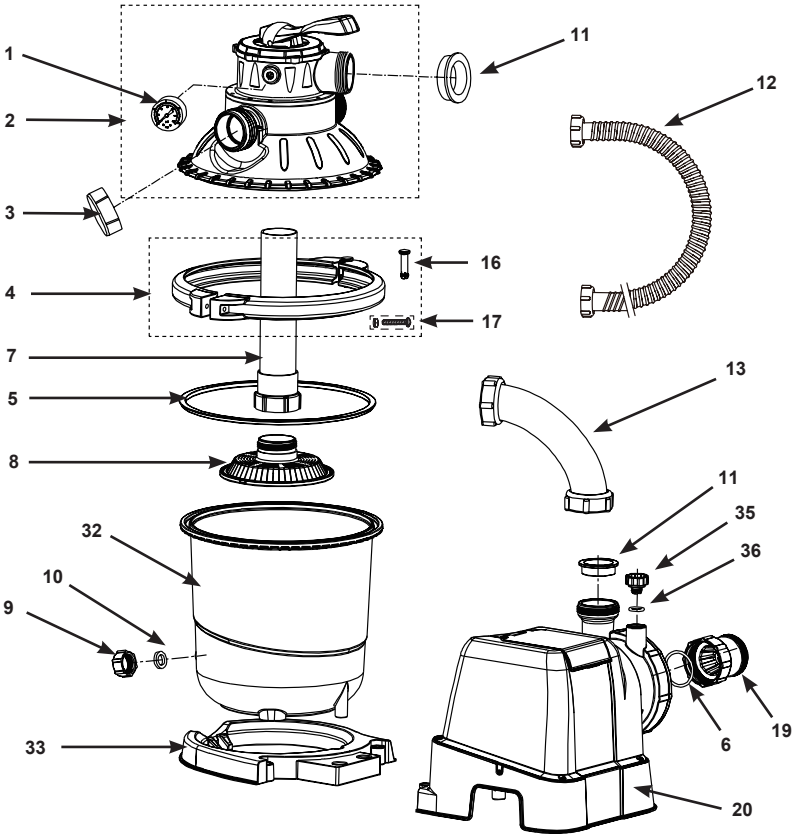

NOTE: Drawings for illustration purpose only. Actual product may vary. Not to scale.

If the pump was purchased individually, only these inlet fitting parts are included:

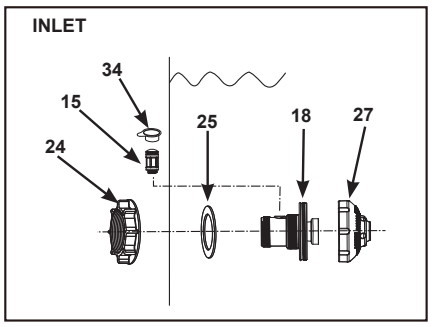

If the pump was purchased as part of a pool set with 1-1/2" (38 mm) connections/ hoses, below fitting parts are included:

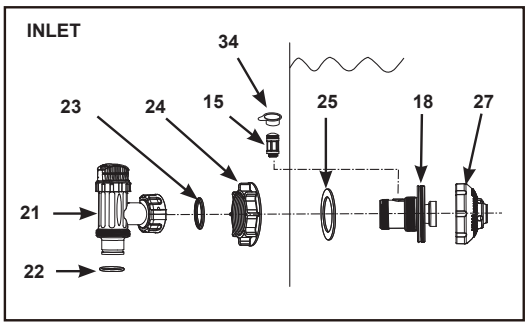

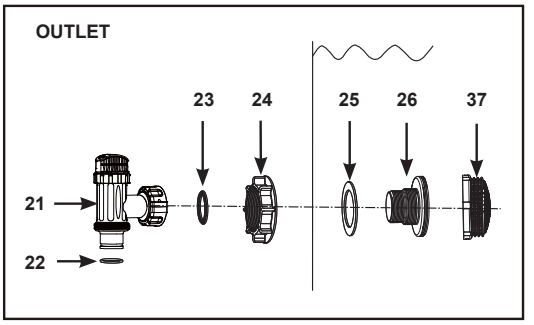

If the pump was purchased as part of a pool set with 1-1/4" (32 mm) connections/ hoses, below fitting parts are included:

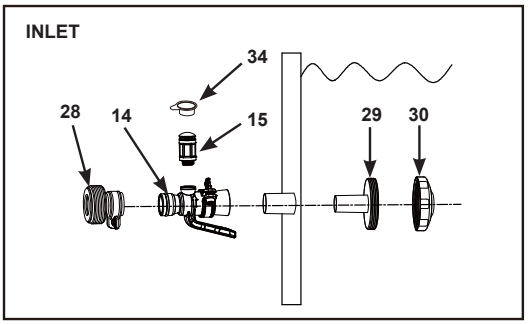

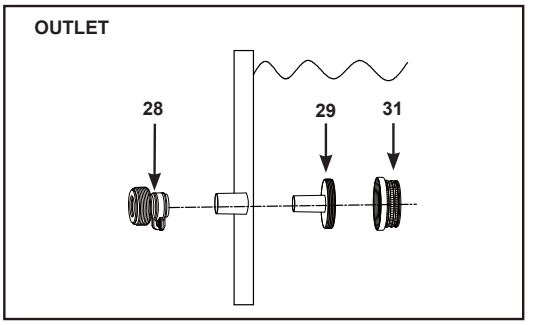

NOTE: Drawings for illustration purpose only. Actual product may vary. Not to scale.
Contact our Authorized Service Centers to order these parts if needed. When ordering parts, be sure to quote the model number and part numbers.

REF. NO.	DESCRIPTION	PART NO.	QTY.		
			Individually	Pool set 1-1/2" (38 mm)	Pool set 1-1/4" (32 mm)
1	PRESSURE GAUGE	11720	1	1	1
2	TANK COVER & 6-WAY VALVE SET	11721B	1	1	1
3	DRAIN OUTLET COVER	11131	1	1	1
4	CLAMP ASSEMBLY	11722	1	1	1
5	TANK O-RING	11728	1	1	1
6	SAND FILTER PUMP MOTOR INLET O-RING	10712	1	1	1
7	CENTER PIPE	11729	1	1	1
8	FILTER GRID	11730	1	1	1
9	DRAIN VALVE CAP	11456	1	1	1
10	DRAIN VALVE O-RING	11385	1	1	1
11	L-SHAPE O-RING	11228	5	5	5
12	HOSE WITH NUTS	11010	2	2	2
13	SAND FILTER INTERCONNECETING HOSE	11763A	1	1	1
14	POOL INLET AIR ADAPTOR	12368	-	-	1
15	AIR JET VALVE	12363	1	1	1
16	CLAMP PIN	11726	1	1	1
17	CLAMP SCREW	11727	1	1	1
18	INLET THREADED AIR CONNECTOR	12371	1	1	-
19	TRANSPARENT LEAF TRAP	11733	1	1	1
20	PUMP MOTOR	13964	1	1	1
21	PLUNGER VALVE (HOSE O-RING & STEP WASHER INCLUDED)	10747	-	2	-
22	HOSE O-RING	10262	-	2	-
23	STEP WASHER	10745	-	2	-
24	STRAINER NUT	10256	1	2	-
25	FLAT STRAINER RUBBER WASHER	10255	1	2	-
26	THREADED STRAINER CONNECTOR	10744	-	1	-
27	ADJUSTABLE POOL INLET JET NOZZLE	12369	1	1	-
28	ADAPTOR B	10722	-	-	2
29	STRAINER CONNECTOR	11070	-	-	2
30	POOL INLET JET NOZZLE	13162	-	-	1
31	STRAINER GRID	12197	-	-	1
32	10" SAND FILTER PUMP TANK	12711	1	1	1
33	10" SAND FILTER PUMP TANK BASE	12715	1	1	1
34	AIR JET VALVE CAP	12373	1	1	1
35	AIR RELEASE VALVE	10725	1	1	1
36	AIR RELEASE VALVE O-RING	10264	1	1	1
37	STRAINER GRID	12198	-	1	-

When ordering parts, be sure to quote the model number and part numbers.

POOL OUTLET - STRAINER & PLUNGER VALVE SETUP (optional)

The strainer grid prevents large objects from jamming and/or damaging the filter pump. If your pool has an inflatable top ring, install the strainer, nozzle and plunger valve before inflating the pool liner top ring.

1. Unscrew plunger valve union from the threaded strainer connector **(26) (see drawing 1)**. Be careful not to lose the step rubber washer **(23)**. Place the plunger valve on the ground in a safe place.
2. Unscrew the strainer nut **(24)** from the threaded connector **(26)**. Leave the flat washer **(25)** on the connector **(26)**.
3. Install the strainer and plunger valve at the lower position of pool outlet (marked "+"). From the inside of the pool liner insert the connector **(26)** into one of the pre-cut holes with the washer remaining on the connector to be placed against the inside of the liner wall.
4. With the flat side of the strainer nut **(24)** facing the outside wall of the liner, screw the strainer nut **(24)** back onto the threaded connector **(26) (see drawing 2)**. Hand tighten only.
5. Ensure the step washer **(23)** is in place, and screw the plunger valve back onto the threaded connector **(26) (see drawing 3)**.
6. Turn the plunger valve handle to close position. Ensure the plunger valve is securely closed. This will prevent water from flowing out during filling of the pool **(see drawing 4)**.

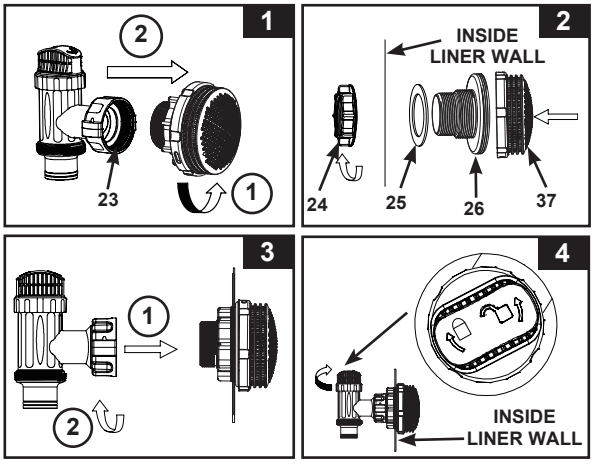

POOL INLET - NOZZLE & PLUNGER VALVE SETUP (optional)

7. Unscrew the plunger valve union from the inlet threaded air connector **(18)** **(see drawing 5)**. Be careful not to lose the step washer **(23)**. Place the plunger valve on the ground in a safe place.
8. Unscrew the strainer nut **(24)** from the inlet threaded air connector **(18)**. Leave the flat washer **(25)** on the connector **(18)**.
9. Install the nozzle and plunger valve at the upper position of pool inlet. From the inside of the pool liner insert the nozzle union **(27 & 18)** into one of the pre-cut holes with the washer remaining on the connector to be placed against the inside of the liner wall.
10. With the flat side of the strainer nut **(24)** facing the outside wall of the liner, screw the strainer nut **(24)** back onto the inlet threaded air connector **(18)** **(see drawing 6)**. Hand tighten only.
11. Finger tighten the adjustable pool inlet jet nozzle **(27)** and the strainer nut **(24)** onto the inlet threaded air connector **(18)**.
12. Screw the air jet valve **(15)** over the inlet threaded air connector **(18)**. **NOTE:** Make sure the air jet valve **(15)** is securely tighten and facing up. Ensure the step washer is in place, and screw the plunger valve union back onto the inlet threaded air connector **(18)** **(see drawing 7)**.
13. Turn the plunger valve handle to close position. Ensure the plunger valve is securely closed. This will prevent water from flowing out during filling of the pool **(see drawing 8)**.
14. Adjust the direction of nozzle head pointing away from the pool outlet for a better circulation result **(see drawing 9)**.
15. The pool liner is now ready to fill with water. Consult the above-ground-pool owner's manual for filling instructions.

NOTE: Do not cover the air jet valve **(15)** with the valve cap **(34)** under normal situation or when the pump is operating. See Troubleshooting Guide section for more details.

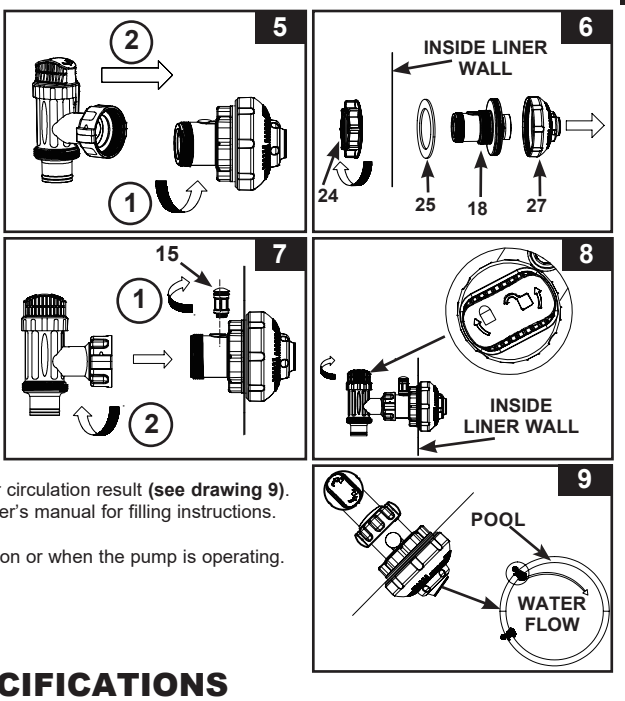

PRODUCT SPECIFICATIONS

The sand filter removes suspended particles but does not sanitize your pool. Pool chemistry is a specialized area and you should consult your local pool service specialist for details.

Power:	220-240 Volt AC
Wattage:	130 W
Maximum working pressure:	1.4 bar (20 psi)
Effective filtering area:	0.05 m² (0.54 ft²)
Pump flow rate (at pump outlet):	5.7 m³/h (1500 GPH)
Recommended filtering media (Not included):	No. 20 silica sand or glass sand. Particle size range 0.45 to 0.85 mm (0.018 to 0.033 inches). Uniformity Coefficient less than 1.75.
Recommended filtering media quantity:	No. 20 silica sand 12 kg (26 lb), glass sand 8.5 kg (18.5 lb), or fiber ball 350 g (0.77 lb).
Limited Warranty:	see "Limited Warranty"

SETUP INSTRUCTIONS

TOOLS REQUIRED: One (1) Phillips screwdriver
Pump location and mounting:

- **The system must be installed on a solid level and vibration-free base.**
- **Provide a location protected from the weather, moisture, flooding and freezing temperature.**
- **Provide adequate access, space and lighting for routine maintenance.**
- **Pump motor requires free circulation of air for cooling. Do not install the pump in a damp or non-ventilated location.**

A team of 2 or more people is recommended for setting up this product.
The appliance is intended only for household use.

Leaf trap setup:

1. Make sure the pump o-ring **(6)** is in place. In a clockwise motion screw the leaf trap **(19)** onto the motor inlet **(see drawing 10)**.

Sand tank installation:

1. Place the tank support base at the selected location.
2. Place the tank on the tank support base **(see drawing 11.1)**.
3. In a clockwise motion screw the center pipe **(7)** onto the filter grid **(8)** securely by hand **(see drawing 11.2)**.
4. Vertically insert the filter grid and center pipe assembly into the tank. Ensure filter grid assembly is securely fitted to the bottom of the tank, and the center pipe is vertically centered inside the tank **(see drawing 11.3)**.

Sand loading:
IMPORTANT: Use No. 20 silica sand or glass sand with particle size range 0.45 to 0.85 mm (0.018 to 0.033 inches) and a Uniformity Coefficient less than 1.75.
Only use the filter media specified by the manufacturer.

NOTE: Before loading the tank with sand, ensure the sand filter grid and center pipe assembly is securely in place on the tank bottom, and the center pipe (7) is vertically centered inside the tank.

1. To prevent sand from falling into the center pipe top opening when pouring the sand, cover the center pipe top opening with a cup or similar object **(see drawing 12)**.
2. With one person holding the center pipe to keep it centered, pour the sand into the tank at a slow rate manually to prevent the filter grid assembly from shifting **(see drawing 13)**.
3. Fill the tank approximately half way first to evenly distribute the sand inside the tank, then fill the tank with some water to provide a cushioning effect when the remaining sand is poured in. This prevents the filter grid **(8)** from excessive shock **(see drawing 14)**.
4. Sand shall be filled between the "MAX" and "MIN" marked gauge on the center pipe. Evenly spread and level out the sand by hand **(see drawings 14 & 15)**.
5. Remove the protective cup from the center pipe top opening.
6. Wash away all sand around the top edge of the tank.

IMPORTANT: Ensure the center pipe (7) remains centered after sand loading is completed before proceeding to the next step.

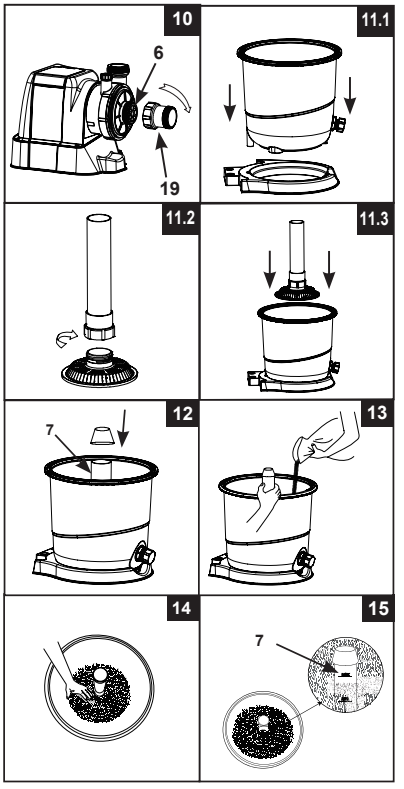

⚠ WARNING

Improper tank valve and clamp assembly could cause the valve and clamp to blow off and cause serious injury, property damage or death.

6-way valve installation:

1. Make sure the tank o-ring **(5)** is in place **(see drawing 16)**. **NOTE:** Ensure the tank o-ring is free of sand or debris.
2. Lower the 6-way valve cover over the tank slowly, and ensure the bypass pipe protruding underneath the 6-way valve cover fits securely into the center pipe **(7)** top opening **(see drawing 17)**. Make sure the tank o-ring is securely fitted between the top edge of the tank groove and the 6-way valve cover edge. **IMPORTANT:** Ensure the 6-way valve cover ridge is aligned with the groove on the tank rim.

   IMPORTANT: There are three hose connection ports on the 6-way valve, ensure the outlet connection (from filter to the pool) on the valve is facing towards the pool (see drawing 18).

3. Remove the screw, and install the clamp around the tank and 6-way valve flanges, then replace the screw and use a phillips screwdriver (not included) to tighten it **(see drawings 18 & 19)**.

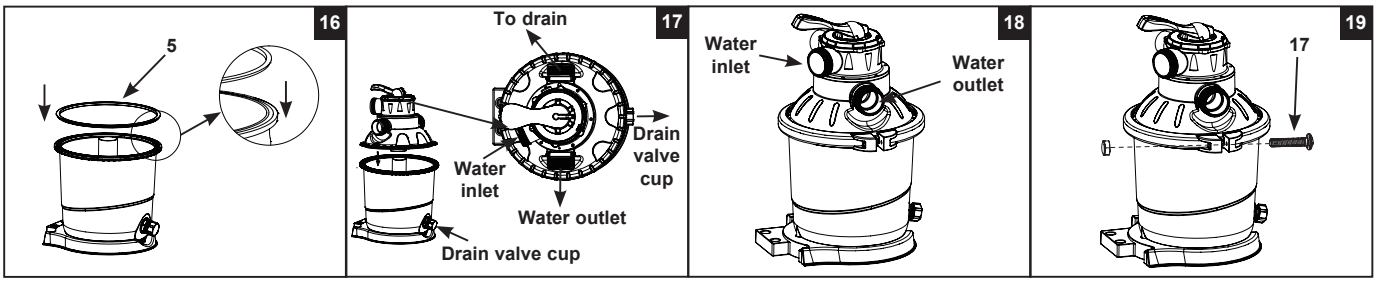

Motor installation:

1. Place an L-shape o-ring **(11)** on the pump motor outlet. In a clockwise motion connect the sand filter interconnecting hose **(13)** to the pump motor outlet **(see drawing 20)**.
2. Connect the pump motor unit to the tank support base **(see drawing 21.1)**. **NOTE:** Ensure the leaf trap water inlet hose connection is facing towards the pool. **IMPORTANT: Some countries, especially in the European community, require the product to be secured to the ground or to a base in a permanent upright position. Check your local authorities to determine if there is a regulation in your area regarding above-the-ground swimming pool filter-pumps. If yes, then the product can be mounted to a platform using the two holes located in the base. See drawing 21.2.**
   The product can be mounted on a cement base or onto a wooden platform to prevent accidental falling over.
   - **The mounting holes are 6.4 mm in diameter and spaced 196.5 mm apart.**
   - **Use two bolts and lock nuts with a maximum of 6.4 mm in diameter.**
3. Place an L-shape o-ring **(11)** on the 6-way valve inlet connection. In a clockwise motion connect the sand filter interconnecting hose **(13)** to the 6-way valve inlet connection **(see drawing 22)**.

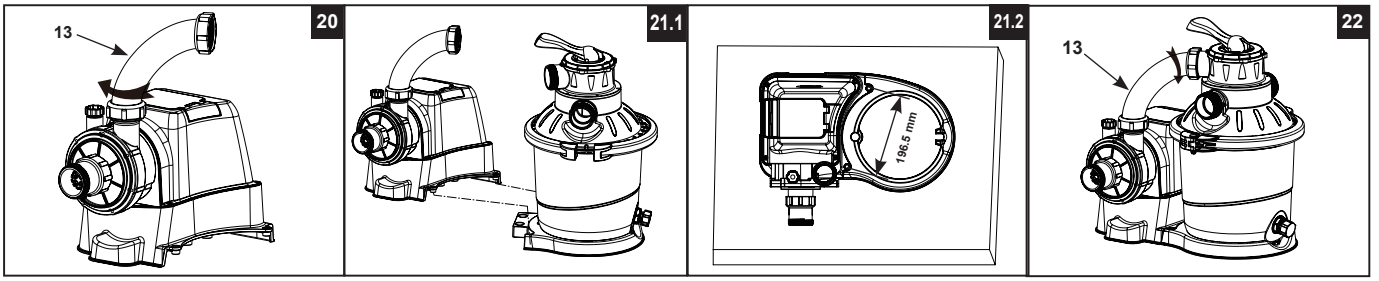

SAND FILTER PUMP HOSE CONNECTION SETUP

⚠ WARNING

- **Keep this product more than 2 m away from the pool.**
- **Keep this product more than 3.5 m away from the pool (for France only).**
- **Keep the plug of this product more than 3.5 m away from the pool.**
- **Position this product away from the pool, so as to prevent children from climbing on it and accessing the pool.**

The 6-way valve has three hose connection ports.

1. Connect one hose **(12)** end to the pre-filter inlet and the other end of the hose to the lower connector with the strainer. Ensure the hoses are securely tightened.
2. Connect the second hose **(12)** between the 6-way valve water outlet and the upper connector with the inlet-nozzle. Ensure the hoses are securely tighten.
3. The third hose connection port (drain/waste outlet) on the 6-way valve shall be directed to a proper draining receptacle using a hose or pipe (not provided). Remove the drain cap before attaching the drain/waste hose or pipe.
4. The sand filter pump is now ready to filter the pool.

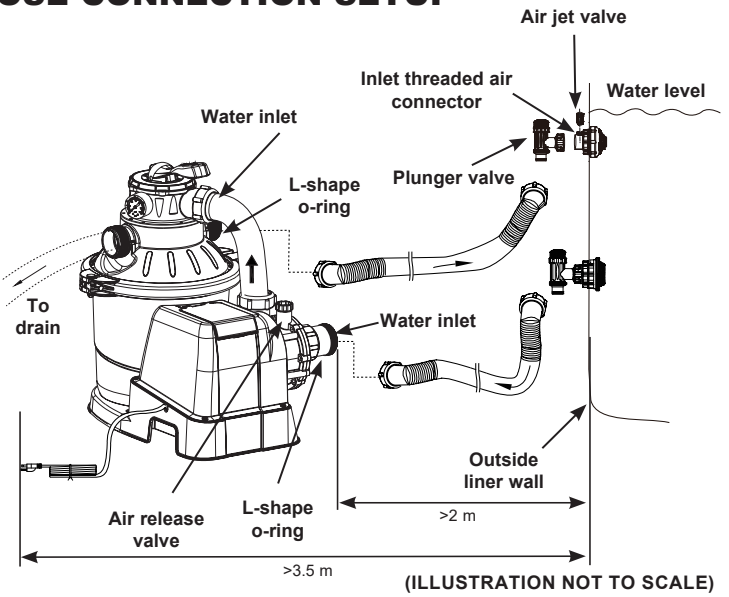

(ILLUSTRATION NOT TO SCALE)

According to the International Standard, IEC 60364-7-702, on electrical installation of swimming pools and other basins equipment, the following installation distances must be respected:

- The filter pump must be positioned more than 2 m away from the pool walls.
- The power cord plug to the 220-240 volt electrical power source of the filter pump must be positioned more than 3.5 m away from the pool walls.

Check your local authorities to determine the appropriate standard and requirements for "electrical installation of swimming pools and basins equipment". The following table is for reference only:

Country/Region	Standard Number
International	IEC 60364-7-702
France	NF C 15-100-7-702
Germany	DIN VDE 0100-702
The Netherlands	NEN 1010-702

For NON-INTEX pool:
Connect the hose **(12)** to the pool inlet/outlet connection with a large hose clamp. Tighten securely.

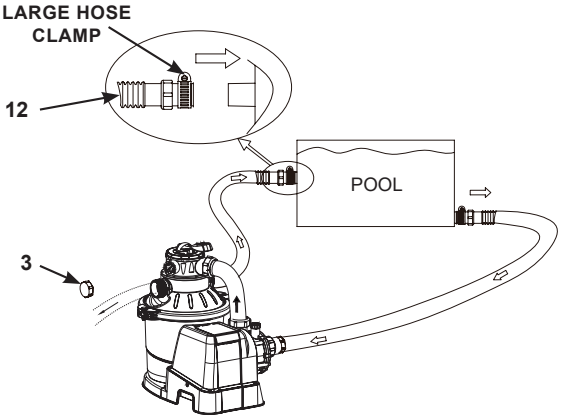

For INTEX pool with 1-1/4" (32 mm) connections/hoses:
Make sure the air jet valve **(15)** is securely tighten onto the pool inlet air adaptor **(14)** and facing up.

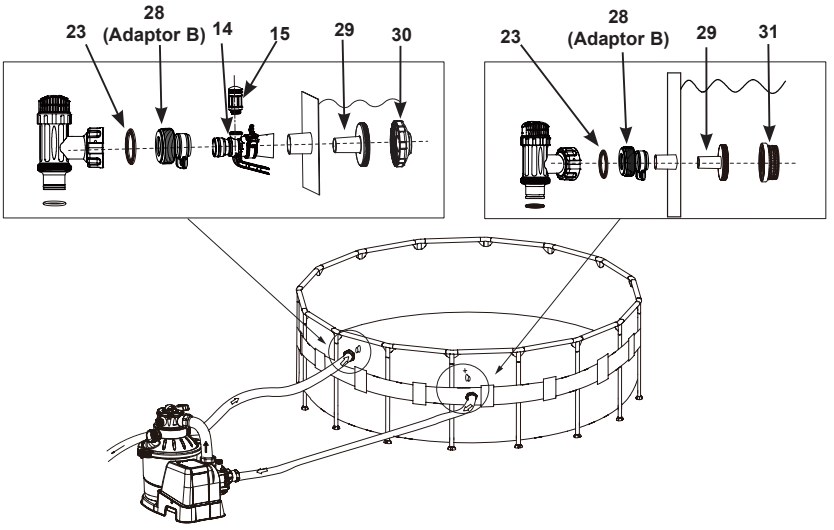

OPERATING INSTRUCTIONS

⚠ WARNING

- **Risk of electric shock. Connect this product only to a grounding type receptacle protected by a ground-fault circuit interrupter (GFCI) or residual current device (RCD). Contact a qualified electrician if you cannot verify that the receptacle is protected by a GFCI/RCD. Use a qualified electrician to install the GFCI/RCD, which has a maximum rate of 30 mA. Do not use a portable residual current device (PRCD).**
- **To reduce the risk of electric shock, do not use extension cords, timers, plug adaptors or converter plugs to connect unit to electric supply; provide a properly located outlet.**
- **Do not attempt to plug in or unplug this product while standing in water or when your hands are wet.**
- **Never operate this product above the maximum working pressure stated on the filter tank.**
- **Always switch off pump before changing the 6-way valve position.**
- **Operating this product without water flowing through the system can cause a build up of hazardous pressure which can result in an explosive situation, serious injury, property damage or death.**
- **Never test this pump with compressed air. Never operate the system with water temperature above 35 °C (95 °F).**

6-way valve positions and function:

Valve Position	Function	Water Flow Direction
FILTER (see drawing 23)	Normal filtration and regular vacuuming of pool	From pump through filter media to pool
BACKWASH (see drawing 24)	Reverses water flow to clean filter media	From pump through filter media to valve waste/drain outlet
RINSE (see drawing 25)	For initial startup cleaning of the sand, and leveling the sand bed after backwashing	From pump through filter media to valve waste/drain outlet
WASTE (see drawing 26)	For vacuuming directly to waste, lowering pool level or to drain the pool	From pump to valve waste/drain outlet bypassing the filter media
RECIRCULATE (see drawing 27)	For circulating water back to pool without going through the filter media	From pump through valve to pool bypassing the filter media
CLOSED (see drawing 28)	Shuts off all flow to filter and pool**"Do not use this setting with pump running"**	

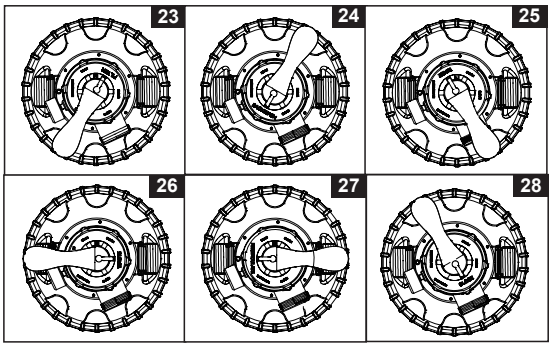

Control panel description:

ON / OFF button	LOCK / UNLOCK button	TIMER / PAIRING button

LED Reading	Definition
00	Standby (Start)
01	Minimum operating hour (1 hour remaining)
02-11	Operating hours (2 - 11 hours remaining)
12	Maximum operating hours (12 hours remaining)
FP	Timer OFF (pump operating continuously)
93	Sleep mode
•	Power-saving mode
AU	Automatic mode controlled by other intex WiFi products such as water analyzer or saltwater system

Initial startup and operation:

Before operating, be sure that:

- All the hoses have been connected and tightened securely, and correct amount of filter sand have been loaded.
- The entire system is connected to a grounding type receptacle protected by a ground-fault circuit interrupter (GFCI) or residual current device (RCD).

⚠ CAUTION

The filter control valve has a closed position. The pump should never be on when the valve is in the closed position. If the pump is operated with the valve closed, explosive situation could exist.

1. Turn both plunger valve handles fully counter-clockwise until they stop. This opens the valves to allow water to flow into the sand filter pump.
2. **Release air from the system -** Ensure the drain/waste outlet on the 6-way valve is not covered and directed to a proper draining receptacle, and the pump is off. Turn the 6-way valve to the "N" position and unscrew the air release valve **(35)** from the motor housing **(see drawing 29)**. When water starts flowing out of the air release valve hole, close the air release valve back.
3. **BACKWASH -** Ensure the drain/waste outlet on the 6-way valve is not covered and directed to a proper draining receptacle, and the pump is off. Depress the 6-way valve and turn it to the "**BACKWASH**" position **(see drawings 24 & 30)**.
   IMPORTANT: To prevent damage to the 6-way valve, always depress the valve handle before turning. Always switch off pump before changing the 6-way valve position.

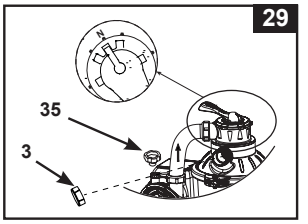

4. Press ⏻ to switch on the system, and then press 🕒 to set the operating TIMER hours (see "Operating the system under TIMER mode or manually" section for details). Water is circulating backward through the sand media and to waste/drain outlet. Backwash until a clear flow of water is observed in the waste/drain outlet.
   NOTE: If the LED display flashes "00", the device is in stand-by mode and the pump will not operate. The initial backwash of the filter is recommended to remove any impurities or fine sand particles in the sand media.
5. Switch off the pump, change the 6-way valve to "RINSE" position **(see drawing 25)**.
6. Switch on the pump and run the pump for about one minute to level out the sand bed after backwashing the sand media.
7. Switch off the pump, change the 6-way valve to "FILTER" position **(see drawing 23)**.

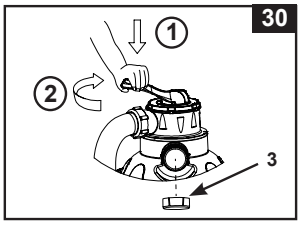

8. Switch on the pump. The system is now operating in the normal filtering mode. Run the pump until the desired pool water clearance is obtained and no more than 12 hours per day. For the initial startup, it is recommended setting the system to a longer TIMER operating hours or "FP" for the pump to operate continuously without the TIMER.
9. Record the initial pressure gauge reading when the filter media is clean.
   NOTE: During initial setup of the system, it may be necessary to backwash frequently due to unusual heavy dirt present in the water and sand. After that, as the filter removes dirt and impurities from the pool water, the accumulated dirt in the sand media will cause the pressure to rise and the flow to diminish. If there is no vacuuming device attached to the system and the pressure gauge reading is in the yellow zone it is time to backwash the sand media, see "BACKWASH" under "initial startup and operation" section. Vacuuming device (i.e. Intex auto pool cleaner) attached to the system may also cause the flow to diminish and the pressure to rise. Remove any vacuuming device from the system and check if the pressure gauge reading has dropped from the yellow zone to the green zone.
10. Monitor the pressure gauge reading, and check that the inlet and outlet openings are not obstructed on a weekly basis. If the pressure gauge indicates yellow it is time to backwash the filter media.

Operating the system under "TIMER" mode or manually:
To operate the sand filter pump in "FILTER" mode under "TIMER" control:

1. **Activate the unit:**
   Press ⏻ button. Flashing code "00" appears on the LED display, indicating that the unit is ready to be programmed.



2. **Set operating hours:**
   With code "00" flashing, press 🕒 button to set the desired operating hours. See the "Operating Time Table" for the required operating hours related to each pool size. Pressing 🕒 will increase the time from 01 to 12 hours maximum. If you have selected too many hours keep pressing 🕒 to repeat the cycle. The built-in timer will now activate the Sand filter pump, at the same time each day, for the number of hours you have set.

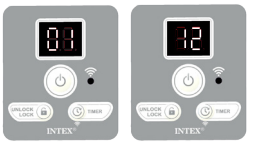

(1 to 12 hours max per cycle)

3. **Lock keypad controls:**
   With the desired hour value showing, press 🔓 button until you hear a "beep". Locking the control buttons into this setting prevents unauthorized changing of the operating cycle.
   NOTE: If you forget to lock the keypad controls, the system will automatically lock it and start working 2 seconds later.
   The sand filter pump is now filtering the water and will stop after the operating hours are completed.
4. **Readjust operating time if necessary:**
   The operating hours can be re-adjusted if necessary. Press 🔓 button until you hear a "beep" to unlock the keypad and the current programmed time will flash. Repeat steps 2 to 3.
5. **Power-saving mode:**
   - When the cycle ends, the system will enter "SLEEP" mode. The display shows "**93**" first, after 5 minutes the display goes into Power-saving mode and the display shows ".". The system will automatically turn itself back on in 24 hours.

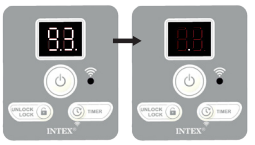

   - While the system is in Power-saving mode, press 🕒 button and the system will briefly display the programmed time and then "**93**".

To view the TIMER preset hours:

While the pump is operating, press 🔓 button, the display will briefly flash the preset hours for 2 seconds and then display back the remaining operating hours.

To operate the sand filter pump manually (without the "TIMER" mode):

1. To run the pump alone without the "Timer", press ⏻ button to turn on the pump, then press 🕒 button until the LED displays "FP", this indicates that the TIMER is off and the pump is now operating continuously.
2. To stop the pump, press ⏻ button again.



NOTE: The "**FP**" mode function in the Intex Link App allows the user to select the pump operating time - 24, 36, 48 or 72 hours - to match the saltwater system's "**BOOST**" cycle time.
To operate the pump via the "Intex Link App", see "Intex Link App Installation and Pairing" section.

Intex Link App Installation and Pairing

The Intex Link App allows you to control your filter pump, and program a schedule for future use remotely even when not at home from your mobile device.

In group mode, the App allows you to program schedules for future use and be controlled by other compatible Intex devices with WiFi connectivity, such as water analyzer or saltwater system.

WiFi APP
QR Code

System and WiFi Router Requirement

The filter pump communicates via Bluetooth and 2.4 GHz WiFi network supporting 802.11 b/g/n wireless technology. The pump hardware **does not support 5 GHz WiFi** networks. It is recommended that you turn off your 5 GHz WiFi network during the App setup and pairing process.

WiFi Pairing

For a successful first time WiFi pairing between the filter pump and your mobile device, make sure:

- To turn on the "**Bluetooth**" function on your mobile device and allow "**Nearby Devices**" permission (Intex Link App info → App permissions → Nearby devices → Allow).
- To turn on "**Location access**" on your mobile device.
- The area where the filter pump will be installed is within your WiFi router coverage range. The area shall be free from metallic walls/mesh and other objects that may interfere with or reduce the WiFi signal.
- Turn off the mobile data (2G, 3G, 4G, 5G and LTE) function on your mobile device first, and make sure your mobile device is connected to your WiFi router before pairing the device with the filter pump. Check the WiFi signal strength is full by browsing the internet with your mobile device using the connected WiFi network and ensure the webpage loading speed is fast.
- Follow below step-by-step sequence.

1) Scan the WiFi App QR code in this manual to install the App. You may also download the "**Intex Link App**" from the App Store or Google Play.
2) Open the App, create a new account (for first time user) and login into the App.
3) Touch the "Add Device" or "+" button on the App to search for nearby devices.
4) Turn ON the filter pump.
5) Press and hold the pairing ( ) button until the WiFi indicator light starts flashing. The filter pump has begun pairing with your mobile device.
6) Touch the sand filter pump icon to be added or paired up with.
7) Choose your wireless WiFi router and enter the WiFi router password, then touch "**Next**" to begin pairing.
8) Once the pump is added successfully, the pairing is completed, and the WiFi indicator light stays on. Touch the "Done" button to begin using the App.
   NOTE: If the pairing fails, the WiFi indicator light will keep flashing. To turn off the WiFi pairing light, unplug and plug the power cord.

App Description



Setting: Allows you to configure your Regional Setting, Pool Settings, and Backwash Reminder.
NOTE: "Regional Setting" is only available if you are in the USA. The App automatically detects your location via your mobile device location access. You must turn on your mobile device location access.

Schedule: Allows you to program schedules for future use, such as starting operating time, duration and repeat schedule.

Dashboard: Allows you to turn on/off the pump, see the remaining operating time and backwash notification message if activated (at the end of each month).

NOTE: The "**FP**" mode function in the Intex Link App allows the user to select the pump operating time – 24, 36, 48 or 72 hours – to match the saltwater system's "**BOOST**" cycle time. If the "**FP**" mode is activated manually from the pump control panel, the pump will run continuously without using the timer mode and must be stopped manually.

App Group Mode Description

In group mode, the pump will be controlled by other Intex accessories with WiFi connectivity, such as Saltwater System or Water Analyzer.

Grouping the pump with other Intex accessories with WiFi connectivity:

1. Pair up each compatible accessory with WiFi connectivity to your mobile device first. Only products with WiFi ( ) icon on the control panel can be connected. Refer to each product pairing guide for details.
2. Tap the group mode ( ) icon to view compatible products that can be grouped together with the pump. Compatible products appear in group of two or three.
3. Tap the check mark to confirm and activate the group mode with the pump. In this group setting, the pump is controlled by the water analyzer or saltwater system.
4. Tap the ( ) to view the list of connected devices, tap the pump icon to open the pump dashboard.
5. When the pump operates in group mode, the display panel shows "AU", indicating automatic mode controlled by other products.
6. To turn off a group mode that is no longer in use, tap the ( ) button.

INTEX POOLS OPERATING TIME TABLE (WITHOUT INTEX SALTWATER SYSTEM)

This table shows the required operating time for average use of the sand filter pump with above ground pools.
If the system is attached to an "Intex Saltwater System" unit, the filter pump running time should be longer than the required operating time of the Intex Saltwater System unit.

Pool Size		Water Capacity (Calculated at 90% for Frame Pool and 80% for Easy Set)		Sand filter pump operating time (For one cycle) / (hours)
		(gal)	(liter)	
INTEX ABOVE GROUND POOLS (AGP's)				
EASY SET® POOL	15' x 33" (457cm x 84cm)	2587	9792	3
	15' x 36" (457cm x 91cm)	2822	10681	3
	15' x 42" (457cm x 107cm)	3284	12430	4
	15' x 48" (457cm x 122cm)	3736	14141	4
	16' x 42"(488cm x 107cm)	3754	14209	4
	16' x 48" (488cm x 122cm)	4273	16173	5
	18' x 42" (549cm x 107cm)	4786	18115	5
	18' x 48" (549cm x 122cm)	5455	20647	6
	18' x 52" (549cm x 132cm)	5894	22309	6
ROUND METAL FRAME POOL	12' x 36" (366cm x 91cm)	2086	7896	2
	15' x 36" (457 cm x 91cm)	3282	12422	4
	15' x 42" (457cm x 107cm)	3861	14614	4
	15' x 48" (457cm x 122cm)	4440	16805	5
	16' x 48" (488cm x 122 cm)	5061	19156	5
	18' x 48" (549 cm x 122 cm)	6423	24311	7
	18' x 52" (549 cm x 132 cm)	6981	26423	7
ULTRA FRAME POOL	12' x 36" (366 cm x 91 cm)	2086	7896	2
	14' x 48" (427 cm x 122 cm)	3861	14614	4
	16' x 48" (488 cm x 122 cm)	5061	19156	5
	18' x 48" (549 cm x 122 cm)	6423	24311	7
	18' x 52" (549 cm x 132 cm)	6981	26423	7
GRAPHITE GRAY PANEL POOL SET™	16'8" x 49" (508 cm x 124 cm	5061	19156	5
	18'8" x 53" (569 cm x 135 cm)	6981	26423	7
OVAL FRAME POOL	18' x 10' x 42" (549 cm x 305 cm x 107 cm)	2885	10920	3
	20' x 12' x 48" (610 cm x 366 cm x 122 cm)	4393	16628	5
	24' x 12' x 48" (732cm x 366 cm x 122 cm)	5407	20465	6
	28' x 12' x 48" (853 cm x 366 cm x 122 cm)	6420	24300	7
RECT. ULTRA FRAME POOL	15' x 9' x 48" (457 cm x 274 cm x 122 cm)	3484	13187	4
	18' x 9' x 52" (549 cm x 274 cm x 132 cm)	4545	17203	5

NOTE: The timer setting has an additional 10 minutes over the actual setting.

NON-INTEX POOLS OPERATING TIME TABLE

This table shows the required operating time for average use of the sand filter pump with above ground pools.

Water Capacity		Sand filter pump operating time (For one cycle)
(gal)	(liter)	(hours)
2000	7570	2
3000	11355	3
4000	15140	4
5000	18925	5
6000	22710	6
7000	26495	7
8000	30280	8

POOL CARE & CHEMICALS

- All pools require care to keep the water clear and hygienically clean. With proper chemical control, your filter will help attain this objective. Consult your pool supply dealer for instructions regarding the proper use of chlorine, algaecide and other chemical agents required for sparkling clear water.
- Keep pool chemicals away from children.
- Do not replenish chemicals in pool while pool is occupied. Skin or eye irritations could occur.
- Daily pH checking and chemical treatment of the water is very important and cannot be overemphasized. Chlorine, algaecide and maintenance of proper pH levels are required when filling the pool as well as during the season. Consult your local swimming pool supply store for instructions.
- The season's first filling of the pool may have brackish water requiring extra water additives and extra filtering time. Do not allow swimming in pool until the pH level is balanced. Consult your local swimming pool supply store for instructions.
- Chlorinated water may damage lawns, gardens or shrubbery as children play in the pool and splash water outside the pool. Lawn areas underneath the pool liner will be destroyed. Note that some types of grass may grow through the liner.
- Filter run time depends on pool size, weather and usage level. Experiment with various run times so as to produce clean clear water.
- European standard EN16713-3 lists some additional pool water quality and water treatment information that can be found at www.intexcorp.com/support.

⚠ CAUTION

Concentrated chlorine solutions may damage the pool liner. Always follow the chemical manufacturer's directions, and the health and hazard warnings.

LONG TERM STORAGE & WINTERIZATION

⚠ CAUTION

Allowing the water to freeze will damage the sand filter and void the warranty.

1. Before emptying your pool for long term storage, or relocation, be sure the water is directed towards an acceptable drain water receptacle away from the house. Check local regulations for specific directions regarding disposal of swimming pool water.
2. Switch off the unit, and disconnect power cord from electrical outlet.
3. When the pool is empty, disconnect all hoses from pump and plunger valves and remove the strainers/plunger valves from the pool wall.
4. In a counter clockwise motion unscrew the drain valve cap **(9)** from the drain valve to thoroughly drain the tank. The drain valve is located at the bottom of the filter tank.
5. Disassemble the pump motor from the tank base.
6. Leave sand filter pump pieces and hoses outside to thoroughly air dry.
7. Coat the following o-rings and washers with petroleum jelly for long term storage:
   - L-shape o-rings **(11)**.
   - Pump hose o-rings **(22)**.
   - Strainer valve assembly step washers **(23)**.
   - Flat strainer rubber washers **(25)**.
8. Depress the 6-way valve handle and rotate so as to set the pointer on the valve top "N" position. This allows the water to drain from the valve. Leave the 6-way valve in this inactive position.
9. It is best to place all dry pieces and pump motor in the original packaging for storage. To avoid condensation or corrosion problem, do not cover or wrap pump motor with plastic bags.
10. Store the pump motor and accessories in a dry place. The storage's temperature should be controlled, between 0 degrees Celsius (32 degrees Fahrenheit) and 40 degrees Celsius (104 degrees Fahrenheit).
11. Cover the tank with a tarpaulin or plastic sheet to protect it from the weather.

TROUBLESHOOTING GUIDE

TROUBLE	CAUSE	SOLUTION
FILTER MOTOR FAILS TO START	• The motor is not plugged in. • The GFCI/RCD circuit breaker is tripped. • Motor too hot and overload protection is shut off.	• Line cord must be plugged into a 3 wire outlet that is protected by a Class A Ground Fault Circuit Interrupter, or RCD. • Reset circuit breaker. If circuit breaker trips repeatedly, your electrical system may have a defect. Turn off circuit breaker and call an electrician to correct the problem. • Let the motor cool down and restart again.
FILTER DOESN'T CLEAN POOL	• Improper chlorine or pH levels. • No filtering media in tank. • Wrong 6-way valve setting position. • Excessively dirty pool. • The strainer screen is restricting the water flow.	• Adjust the chlorine and pH level. Consult your local swimming pool supply stores. • Load with filter sand, see "sand loading instructions". • Set valve to "FILTER" position. • Operate the filter for longer periods. • Clean the strainer screen at the inlet.
FILTER DOESN'T PUMP WATER OR FLOW IS VERY SLOW	• Trapped air in the system. • Clogged inlet or discharge. • An air leak on the intake line. • Excessively dirty pool. • Sand media clogged with dirt. • Nozzle and strainer connections are reversed. • Crusting or caking on the filtering sand surface. • Pool vacuuming device attached to the system. • Inlet threaded air connector connected to the wrong hole on the liner.	• Release the air, see operating instructions section. • Clear any obstructions in the intake hose by discharging it inside pool wall. • Tighten hose nuts, check hoses for damage, check pool water level. • Backwash filter. • Install the nozzle at the upper position of the pool inlet, and the strainer at the lower position of the pool outlet. • Remove about 1" of sand if necessary. • Remove any pool vacuuming device attached to the system line. • Make sure the inlet threaded air connector is connected to the pool inlet upper hole.
PUMP DOESN'T WORK	• Low water level. • Strainer screen clogged up. • An air leak on the intake hose. • Faulty motor or the impeller is jammed.	• Fill pool to correct water level. • Clean strainer screens at pool inlet. • Tighten hose nuts, check hose for damage. • Contact Intex service center.
6-WAY VALVE/COVER LEAKING	• Sand tank o-ring missing. • Sand tank o-ring dirty. • Flange clamp not tight. • 6-way valve damage.	• Remove 6-way valve cover and ensure the o-ring is in place. • Clean sand tank o-ring with garden hose water. • Tighten securely. • Contact Intex service center.
HOSE LEAKING	• Hose nut not securely tight. • Hose connection fitting o-ring / L-shape o-ring missing.	• Tighten/reinstall hose nut. • Ensure o-ring/L-shape o-ring is in place and not damaged.
TIMER IS INACCURATE OR TIMER CAN'T BE SET	• Possible inner timer defective.	• Turn off the pump and restart 5 minutes later. • Re-set the timer. • Contact Intex service center.
PRESSURE GAUGE DOESN'T WORK	• Clogged inlet of the pressure gauge. • Pressure gauge damage.	• Clear any obstructions in the intake by unscrewing it from the 6-way valve. • Contact Intex service center.
SAND IS FLOWING BACK INTO THE POOL	• Sand is too small. • Sand bed is calcified.	• Use only No. 20 silica sand with particle size range 0.45 to 0.85 mm (0.018 to 0.033 inches) and a Uniformity Coefficient less than 1.75. • Change sand.
INLET THREADED AIR CONNECTOR / AIR JET VALVE LEAKING	• Plunger valve not well-fitted. • Air jet valve is not tight and facing up. • Air jet valve internal seal blocked. • Air jet valve internal seal dirty. • Air jet valve broken.	• Tighten or reinstall plunger valve. • Tighten air jet valve and make sure it's facing up. • Turn pump ON and run for few seconds, then turn OFF, repeat 3 times. • Remove air jet valve, flush dirt out with water and replace valve back. • Replace a new air jet valve.
SMALL LEAK FROM AIR JET VALVE WHEN PUMP IS ON	• Accessories attached to the water circulation line.	• Remove all the accessories (such as solar mat, auto pool cleaner, LED light) from the water circulation line and place the air jet valve cap **(34)** over the air jet valve **(15)**. Do not cover the air jet valve **(15)** with the valve cap **(34)** under normal situation or when the pump is operating.

WIFI APP TROUBLESHOOTING

PROBLEM	CAUSE	SOLUTION
WIFI PAIRING FAILURE DURING THE FIRST TIME SETUP	• The filter pump model does not support WiFi App fuction.	• Make sure the filter pump model has the WiFi icon on the control panel.
	• Wrong version of mobile device.	• Ensure the right version of mobile devices: a. iOS - Apple iPhone 6, 6 Plus and greater. Tablet compatibility is not optimized. b. Android – All Android phones. Tablet compatibility is not optimized.
	• Incompatible mobile device operating system.	• Ensure the right version of operating system: a. Apple devices – iOS 11.0 and greater. b. Android devices – Android 6.0 and greater. For 6.0 and greater version, you must turn on the GPS signal on your mobile device for the first time pairing. Once you have successfully paired the filter pump and save it, you may turn off the GPS signal.
	• Wrong router network band.	• Make sure you are connecting to a 2.4 GHz network and try to pair the mobile device with the filter pump again.
	• Wrong network name.	• Make sure you are connecting to the right WiFi router signal and try to pair the mobile device with the filter pump again. • Make sure your mobile device and filter pump are connected to the same WiFi router signal.
	• Wrong WiFi password.	• Ensure correct WiFi router password. See "WiFi Pairing" section.
	• The filter pump location is too far from your WiFi router signal coverage range.	• Ensure your mobile device is connected to your WiFi router and can access and browse the internet. • If you cannot move your filter pump, then you need to move your WiFi router or add a repeater/signal booster so that you can receive signals from your WiFi router at your filter pump location. • Try to pair the mobile device with the filter pump again.
	• The App does not load.	• Force-quit the App, re-launch the App and try to pair the filter pump with your mobile device again. • Ensure the right version of mobile devices and operation system. • Uninstall the App and reinstall it again. See "WiFi Pairing" section.
	• Bluetooth and WiFi not activated on your mobile device. • IntexLink App "Nearby Devices" not activated. • Your mobile device "Location access" is not activated.	• Turn on the Bluetooth and WiFi functions on your mobile device first. • Allow "Nearby Devices" permission (IntexLink App info → App permissions → Nearby devices → Allow). • Turn on "Location access" on your mobile device while using the App. • Turn off and on the filter pump, try to pair it again. See "WiFi Pairing" section.
	• Wrong WiFi pairing sequence.	• Refer to "WiFi Pairing" section.
OFFLINE AFTER SUCCESSFUL INITIAL SETUP AND PAIRING	• The display is off. • Control panel display failure.	• Press any button to reactivate the filter pump display panel. • Reset the GFCI/RCD, restart all over again. • Try to pair the mobile device with the filter pump again. • Replace the Control Station.
	• WiFi signal failure. • WiFi LED indicator light is blank.	• Reboot the WiFi router by powering it off for one minute and then turning it back on. Refer to your WiFi router's troubleshooting guide for more assistance. • Make sure your mobile device and filter pump are connected to the same WiFi router signal, and your mobile device can access and browse the internet from the location where the filter pump is setup. • If you cannot move your filter pump, then you need to move your WiFi router or add a repeater/signal booster so that you can receive signals from your WiFi router at your filter pump location. • Try connecting using your mobile data function (2G, 3G, 4G, 5G and LTE), if it works, there may be a firewall that is preventing communications between your mobile device and the filter pump.
	• The App does not load.	• Force-quit the App, re-launch the App and try to pair the filter pump with your mobile device again. • Make sure your mobile device data function is activated and the device can access and browse the internet. • If the mobile data function (2G, 3G, 4G, 5G and LTE) works, try pairing the filter pump to your Wi-Fi router network. See "WiFi Pairing" section.
	• Other interferences.	• Make sure there are no big metallic walls, objects between the filter pump and your WiFi router signal.

COMMON POOL PROBLEMS

PROBLEM	DESCRIPTION	CAUSE	SOLUTION
ALGAE	• Greenish water. • Green or black spots on pool liner. • Pool liner is slippery and/or has a bad odor.	• Chlorine and pH levels need adjustment.	• Super chlorinate with shock treatment. Correct pH to your pool store's recommended level. • Vacuum pool bottom. • Maintain proper chlorine level.
COLORED WATER	• Water turns blue, brown, or black when first treated with chlorine.	• Copper, iron or maganese in water being oxidized by the added chlorine.	• Adjust pH level to the recommended level. • Run filter until water is clear.
FLOATING MATTER IN WATER	• Water is cloudy or milky.	• "Hard water" caused by a too high pH level. • Chlorine content is low. • Foreign matter in water.	• Correct the pH level. Check with your pool dealer for advice. • Adjust the chlorine level.
CHRONIC LOW WATER LEVEL	• Level is lower than on previous day.	• Rip or hole in pool liner or hoses. • The drain valves are loose.	• Repair with a patch kit. • Finger tighten all caps.
SEDIMENT ON POOL BOTTOM	• Dirt or sand on pool floor.	• Heavy use, getting in and out of pool.	• Use Intex pool vacuum to clean of pool.
SURFACE DEBRIS	• Leaves, insects etc.	• Pool too close to trees.	• Use Intex pool skimmer.

GENERAL AQUATIC SAFETY

Water recreation is both fun and therapeutic. However, it involves inherent risks of injury and death. To reduce your risk of injury, read and follow all product, package and package insert warnings and instructions. Remember, however, that product warnings, instructions and safety guidelines cover some common risks of water recreation, but do not cover all risks and or dangers.

For additional safeguards, also familiarize yourself with the following general guidelines as well as guidelines provided by nationally recognized Safety Organizations:

- Demand constant supervision. A competent adult should be appointed as a "lifeguard" or water watcher, especially when children are in and around the pool.
- Learn to swim.
- Take the time to learn CPR and first aid.
- Instruct anyone who is supervising pool users about potential pool hazards and about the use of protective devices such as locked doors, barriers, etc.
- Instruct all pool users, including children what to do in case of an emergency.
- Always use common sense and good judgement when enjoying any water activity.
- Supervise, supervise, supervise.

LIMITED WARRANTY

Your Sand Filter Pump has been manufactured using the highest quality materials and workmanship. All Intex products have been inspected and found free of defects prior to leaving the factory. This limited warranty applies only to the Sand Filter Pump and accessories listed below.

This limited warranty is in addition to, and not a substitute for, your legal rights and remedies. To the extent that this warranty is inconsistent with any of your legal rights, they take priority. For example, consumer laws across the European Union provide statutory warranty rights in addition to the coverage you receive from this limited warranty: for information on EU-wide consumer laws, please visit the European Consumer Center website at http://ec.europa.eu/consumers/ecc/contact_en/htm.

The provisions of this limited warranty apply only to the original purchaser and are not transferable. This Limited Warranty is valid for the period noted below from the latter of the date of the initial retail purchase or delivery. Keep your original sales receipt with this document, as proof of purchase will be required and must accompany warranty claims or the limited warranty will be invalid.

Sand Filter Pump Warranty – 2 Years
Hoses, Plunger Valves & Fittings Warranty – 180 days

If you find a manufacturing defect in the Sand Filter Pump during the warranty periods noted above, please contact the appropriate Intex Service Center listed in the separate "Authorized Service Centers" sheet. If the item is returned as directed by the Intex Service Center, the Service Center will inspect the item and determine the validity of the claim. If the item is covered by the provisions of the warranty, the item will be repaired or replaced, with the same or comparable item (at Intex's choice) at no charge to you.

Other than this warranty, and other legal rights in your country, no further warranties are implied. To the extent possibly in your country, in no event shall Intex be liable to you or any third party for direct or consequential damages arising out of the use of your Sand Filter Pump, or Intex or its agents' and employees' actions (including the manufacture of the product). If your country does not allow the exclusion or limitation of incidental or consequential damages, this limitation or exclusion does not apply to you.

You should note that this limited warranty does not apply in the following circumstances:

- If the Sand Filter Pump is subject to negligence, abnormal use or application, accident, improper operation, improper voltage or current contrary to operating instructions, improper maintenance or storage;
- If the Sand Filter Pump is subject to damage by circumstances beyond Intex's control, including but not limited to, ordinary wear and tear and damage caused by exposure to fire, flood, freezing, rain, or other external environmental forces;
- To parts and components not sold by Intex; and/or
- To unauthorized alterations, repairs or disassembly to the Sand Filter Pump by anyone other than Intex Service Center personnel.

The costs associated with the loss of pool water, chemicals or water damage are not covered by this warranty. Injury or damage to any property or person is not covered by this warranty.

Read the owner's manual carefully and follow all instructions regarding proper operation and maintenance of your Sand Filter Pump. Always inspect your product prior to use. This limited warranty will be void if use instructions are not followed.